IFM7/IFM10/
IFM15/IFM17/
IFM22/IFM33/
IF42/IF53/IRM10/
IRM22/IR33/IR42/
IF22 2V

Manuale di istruzione
Notice d'utilisation
Instruction manual
Руководство по эксплуатации
Manual de instruciones
Gebrauchsanweisungen

ITALIANO

DICHIARAZIONE CE DI CONFORMITÀ

In accordo con la Direttiva Bassa Tensione **2014/35/UE**, con la direttiva **2014/30/UE** (Compatibilità Elettromagnetica), con la direttiva **2006/42 CE** (Macchine), integrate dalla marcatura CE

In accordo con il regolamento CE N. **1935/2004** del Parlamento Europeo e del Consiglio del **27 ottobre 2004** riguardante i materiali e gli oggetti destinati a venire a contatto con i prodotti alimentari.

Tipo d'apparecchiatura	**IMPASTATRICE A SPIRALE**
Marchio commerciale	**PIZZA GROUP S. r. l.**
Modello	**IF ÷ IR ÷ IFM ÷ IRM** **IF-VS ÷ IR-VS** **IF 2V ÷ IR 2V**
Costruttore	**PIZZA GROUP S. r. l.**
	Via Carnia, 15
Indirizzo costruttore	**33078, San Vito al Tagliamento (PN)**
	Italia
Telefono	**+39.0434.857000**
Telefax	**+39.0434.857001**

Le norme armonizzate o le specifiche tecniche (designazioni) che sono state applicate in accordo con le regole della buon'arte in materia di sicurezza in vigore nella CEE sono:

Norme o altri documenti

EN 60335-1 EN 60335-2-64

EN 292 EN 294 EN 418

EN 55014 EN 61000-3-2 EN 61000-3-3

Altre informazioni:

In qualità di costruttore e/o rappresentante autorizzato dalla società all'interno della CEE, si dichiara sotto la propria responsabilità che gli apparecchi sono conformi alle esigenze essenziali previste dalle Direttive su menzionate.

San Vito al Tagliamento (PN)

01.06.2016

Bellotto Carlo

Presidente

INDICE

1 AVVERTENZE PER LA SICUREZZA

AVVERTENZE PER L'INSTALLATORE

AVVERTENZE PER L'UTILIZZATORE

AVVERTENZE PER IL MANUTENTORE

2 INSTALLAZIONE

LIVELLAMENTO DELL'IMPASTATRICE

ALLACCIAMENTO AGLI IMPIANTI

MESSA A TERRA

3 MESSA IN SERVIZIO ED USO DELL'IMPASTATRICE

DESCRIZIONE DEL PANNELLO COMANDI IF ÷ IR ÷ IFM ÷ IRM

FASE D'AVVIO IF ÷ IR ÷ IFM ÷ IRM

DESCRIZIONE DEL PANNELLO COMANDI IF-VS ÷ IR-VS

FASE D'AVVIO IF-VS ÷ IR-VS

DESCRIZIONE DEL PANNELLO COMANDI IF-2V ÷ IR-2V

FASE D'AVVIO IF-2V ÷ IR-2V

FASE DI LAVORO

DISPOSITIVI DI SICUREZZA

FASE DI SPEGNIMENTO

4 MANUTENZIONE E PULIZIA

PRECAUZIONI DI SICUREZZA

MANUTENZIONE ORDINARIA RIVOLTA ALL'UTILIZZATORE

PULIZIA GENERALE

TENSIONAMENTO DELLA CATENA SUPERIORE

INGRASSAGGIO DELLE CATENE

5 POSSIBILI ANOMALIE

6 INFORMAZIONI PER LA DEMOLIZIONE E LO SMALTIMENTO

1 AVVERTENZE PER LA SICUREZZA

AVVERTENZE PER L'INSTALLATORE

⚠
- Verificare che le predisposizioni all'accoglimento dell'impastatrice siano conformi ai regolamenti locali, nazionali ed europei.
- Osservare le prescrizioni indicate nel presente manuale.
- Non effettuare collegamenti elettrici volanti con cavi provvisori o non isolati.
- Verificare che la messa a terra dell'impianto elettrico sia efficiente.
- Usare sempre i dispositivi di sicurezza individuale e gli altri mezzi di protezione previsti per legge.

AVVERTENZE PER L'UTILIZZATORE

⚠ Le condizioni ambientali del luogo dove viene installata la macchina deve avere le seguenti caratteristiche:
- essere asciutto;
- fonti idriche e di calore adeguatamente distanti;
- ventilazione ed illuminazione adeguata e rispondenti alle norme igieniche e di sicurezza previste dalle leggi vigenti;
- il pavimento deve essere piano e compatto per favorire una pulizia accurata;
- non devono essere posti nelle immediate vicinanze della macchina, ostacoli di qualunque natura che possano condizionare la normale ventilazione della stessa.

Inoltre l'utilizzatore deve:
- fare attenzione che i bambini non si avvicinino con la macchina in funzione;
- osservare le prescrizioni indicate nel presente manuale;
- non rimuovere o manomettere i dispositivi di sicurezza della macchina;
- prestare sempre la massima attenzione, ovvero osservare il proprio lavoro e non utilizzare la macchina quando si è distratti;
- eseguire tutte le operazioni con la massima sicurezza e calma;
- rispettare le istruzioni e gli avvertimenti evidenziati dalle targhette esposte sull'impastatrice.

Le targhette sono dispositivi antinfortunistici, pertanto devono essere sempre perfettamente leggibili. Qualora risultassero danneggiate ed illeggibili è obbligatorio sostituirle, richiedendone il ricambio originale al Costruttore.

- Alla fine di ogni utilizzo, prima delle operazioni di pulizia, di manutenzione o spostamento della macchina togliere l'alimentazione elettrica.

AVVERTENZE PER IL MANUTENTORE

⚠
- Osservare le prescrizione indicate nel presente manuale.
- Usare sempre i dispositivi si sicurezza individuale e gli altri mezzi di protezione.
- Prima di iniziare qualsiasi operazione di manutenzione assicurarsi che l'impastatrice, nel caso sia stata utilizzata, si sia raffreddata (motore elettrico).
- Qualora anche uno dei dispositivi di sicurezza risultasse starato o non funzionante, l'impastatrice è da considerarsi non funzionante.
- Togliere l'alimentazione elettrica prima di intervenire su parti elettriche, elettroniche e connettori.

2 INSTALLAZIONE

L'installazione deve essere effettuata da personale qualificato secondo i regolamenti locali, nazionali ed europei.

LIVELLAMENTO DELL'IMPASTATRICE

In caso d'instabilità dell'impastatrice dovute all'irregolarità del pavimento, spessorare i piedini o le ruote con pezzi di lastra di gomma.

ALLACCIAMENTO AGLI IMPIANTI

È sufficiente collegare il cavo di alimentazione alla rete elettrica.
La presa della rete elettrica deve essere facilmente accessibile e non deve richiedere alcun spostamento.

☞ **Il collegamento elettrico (spina) deve essere facilmente accessibile anche dopo l'installazione dell'impastatrice**.

La distanza tra la macchina e la presa deve essere tale da non provocare la tensione del cavo di alimentazione. Inoltre, il cavo stesso non deve trovarsi sotto i piedini o ruote di appoggio della macchina.

! **Se il cavo di alimentazione risulta danneggiato deve essere sostituito dal servizio di assistenza tecnica o da un tecnico qualificato in modo da prevenire ogni rischio**.

MESSA A TERRA

PERICOLO

⚠ **È obbligatorio che l'impianto sia provvisto di messa a terra e di interruttore differenziale in ottemperanza alle leggi vigenti**.

3 MESSA IN SERVIZIO ED USO DELL'IMPASTATRICE

DESCRIZIONE DEL PANNELLO COMANDI IF ÷ IR ÷ IFM ÷ IRM

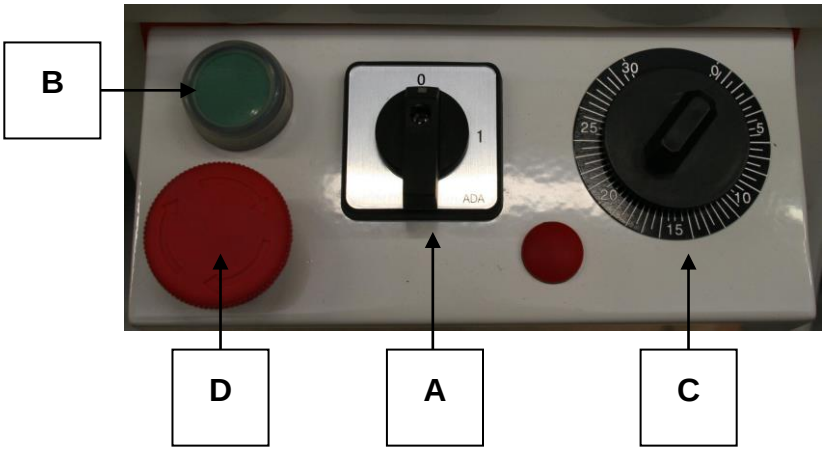

Il pannello è costituito da un interruttore generale (**A**), da un pulsante verde di avviamento (**B**), da un timer (**C**), da un pulsante rosso per l'arresto d'emergenza (**D**).
Il pannello consente l'accensione e lo spegnimento dell'impastatrice, ne regola il funzionamento e permette il settaggio.

Leggenda:

A = Interruttore generale;
B = Pulsante verde d'avvio;
C = Timer;
D = Pulsante rosso d'emergenza / Stop;

FASE D'AVVIO IF ÷ IR ÷ IFM ÷ IRM

Collegare l'impastatrice alla rete elettrica e ruotare l'interruttore generale **A** in posizione "**1**". Nelle versioni 2V ruotare l'Interruttore in posizione "**1"** o "**2"** a seconda della velocità desiderata.
Ruotare la manopola del timer **C** sul tempo desiderato da 0 a 30 min.
Premere il pulsante verde **B** per avviare sia la vasca che la spirale.

DESCRIZIONE DEL PANNELLO COMANDI IF-VS ÷ IR-VS

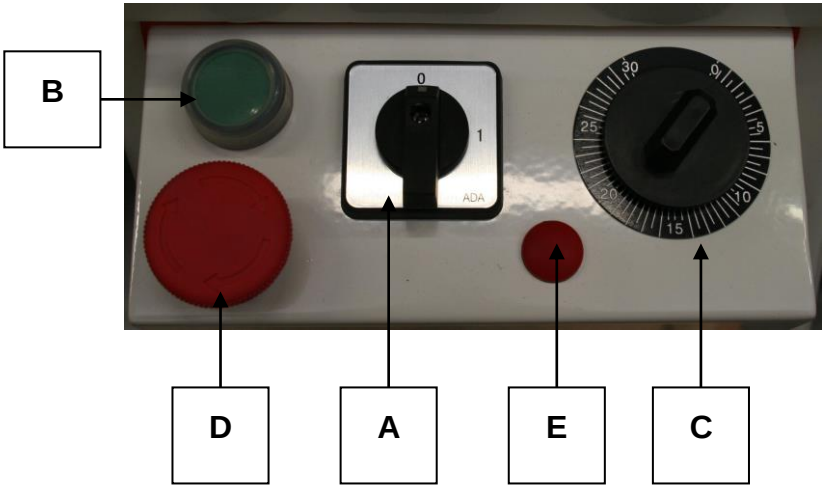

Il pannello è costituito da un interruttore generale (**A**), da un pulsante verde di avviamento (**B**), da un timer (**C**), da un pulsante rosso per l'arresto d'emergenza (**D**) e da una manopola per la variazione della velocità (**E**).

Il pannello consente l'accensione e lo spegnimento dell'impastatrice, ne regola il funzionamento e permette il settaggio.

Leggenda:

A = Interruttore generale
B = Pulsante verde d'avvio
C = Timer
D = Pulsante rosso d'emergenza / Stop
E = Variatore di velocità

FASE D'AVVIO IF-VS ÷ IR-VS

Collegare l'impastatrice alla rete elettrica e ruotare l'interruttore generale **A** in posizione "**1**".
Ruotare la manopola del timer **C** sul tempo desiderato da 0 a 30 min.
Premere il pulsante verde **B** per avviare sia la vasca che la spirale.
Ruotare la manopola del variatore di velocità **E** per aumentare o diminuire la velocità di rotazione della vasca e della spirale.

DESCRIZIONE DEL PANNELLO COMANDI IF-2V ÷ IR-2V

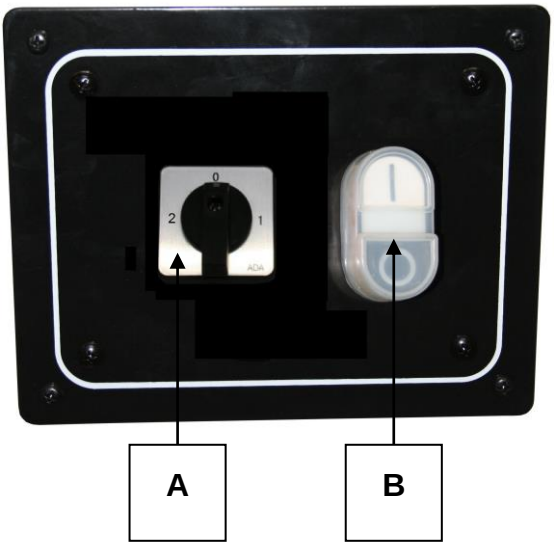

Il pannello è costituito da un selettore (**A**) per le 2 velocità e da un pulsante 0-1 (**B**)

Il pannello consente l'accensione e lo spegnimento dell'impastatrice, ne regola il funzionamento e permette il settaggio.

Leggenda:

A = Selettore 1-0-2
B = Pulsante START - STOP

FASE D'AVVIO IF-2V ÷ IR-2V

Collegare l'impastatrice alla rete elettrica e ruotare il selettore **A** in posizione "**1**" o "2" a seconda della velocità desiderata.
Premere "1" sul pulsante **B** per avviare sia la vasca che la spirale.
Premere "1" sul pulsante B per fermare la macchina.

FASE DI LAVORO

Prima d'iniziare ogni ciclo di lavoro accertarsi che la macchina sia perfettamente pulita, in particolare le superfici della vasca, della spirale e dello spacca pasta a contatto con i prodotti alimentari.
Dopo aver sollevato la protezione **F**, versare all'interno della vasca gli ingredienti del tipo e quantità desiderata.

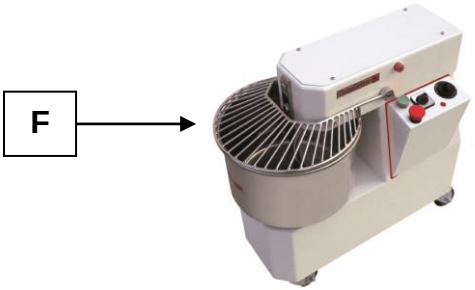

Abbassare la protezione **F**, impostare il timer **C** su un tempo definito e premere il pulsante verde di avvio **B**.
L'azione svolta dalla spirale, il cui movimento è sincronizzato con la rotazione della vasca, consente di ottenere l'amalgama di farina, acqua, sale, lievito ed altri eventuali prodotti alimentari fino ad ottenere la consistenza desiderata dell'impasto.
All'occorrenza, per modificare leggermente le caratteristiche e/o la consistenza dell'impasto iniziale, versare gli ingredienti della vasca attraverso la griglia di protezione **F**.
Completato il ciclo di lavorazione, arrestare la macchina premendo il pulsante rosso d'emergenza **D**, sollevare la protezione mobile fino alla massima apertura, prelevare l'impasto dalla vasca e procedere alla pulizia della macchina.
Nel caso il funzionamento dell'impastatrice venga fermato per qualsiasi motivo, per il riavvio attendere almeno 15 secondi prima di riavviare la macchina.
La macchina con testa sollevabile e vasca estraibile, pur essendo funzionalmente identica alla versione con testa e vasca fissa, si differenzia da quest'ultima per le possibilità offerte alla fine di ogni ciclo di lavoro, ovvero una maggior facilità nel prelievo dell'impasto ed una più facile fase di pulizia.
Per sollevare la testa ed estrarre la vasca procedere con le seguenti modalità: arrestare la macchina premendo il pulsante rosso d'emergenza **D**; staccare la spina dalla presa di alimentazione elettrica; sollevare completamente la protezione mobile; tirare orizzontalmente il perno, mediante la manopola posta sul lato destro della macchina, fino a sbloccare la testa; sollevare la testa con l'ausilio del pistoncino sottostante; ruotare in senso orario il disco posto sotto la vasca ed infine estrarre la vasca per il prelievo dell'impasto. Dopo aver ultimato la pulizia della macchina, rimontare la vasca procedendo in senso inverso assicurandosi che i perni sottostanti la vasca siamo correttamente inseriti all'interno dei fori posti sulla macchina.

! Prima di prelevare l'impasto eseguire sempre la procedura di spegnimento.

DISPOSITIVI DI SICUREZZA

L'impastatrice è dotata di alcuni dispositivi di sicurezza per la salvaguardia dell'utilizzatore, ovvero di una griglia di protezione mobile e di un dispositivo di verifica se la griglia è abbassata. Le impastatrici con testa sollevabile e vasca estraibile sono munite anche di un dispositivo di verifica se la testa è abbassata o sollevata, di un perno di bloccaggio della testa in posizione abbassata, di un dispositivo di verifica se la vasca è inserita o estratta ed infine di un disco di bloccaggio della vasca.

! Prima di procedere con la fase di lavoro verificare singolarmente i vari dispositivi di sicurezza. Essi sono efficienti quando:

- sollevando la griglia la macchina si arresta;
- sollevando la testa la macchina si arresta o non si avvia;
- estraendo la vasca la macchina si arresta o non si avvia;
- tirando moderatamente verso l'alto sia la vasca che la testa queste rimangono bloccate.

FASE DI SPEGNIMENTO

Per spegnere l'impastatrice premere il pulsante rosso d'emergenza **D** e ruotare la manopola dell'interruttore generale **A** in posizione "**0**".

4 MANUTENZIONE E PULIZIA

PRECAUZIONI DI SICUREZZA

! Prima di effettuare qualsiasi operazione di manutenzione, pulizia compresa, adottare le seguenti precauzioni:

- accertarsi che l'interruttore generale sia disinserito;
- accertarsi che l'alimentazione non possa essere riattivata accidentalmente. Staccare la spina dalla presa di alimentazione elettrica;
- utilizzare i dispositivi di protezione individuale previsti dalla direttiva 89/391/CEE;
- operare sempre con attrezzature appropriate per la manutenzione;
- terminata la manutenzione o le operazioni di riparazione, prima di rimettere l'impastatrice in servizio, reinstallare tutte le protezione e riattivare tutti i dispositivi di sicurezza.

MANUTENZIONE ORDINARIA RIVOLTA ALL'UTILIZZATORE

L'impastatrice necessita di una semplice ma frequente ed accurata pulizia per poter garantire sempre un efficiente rendimento ed un regolare funzionamento.

PULIZIA GENERALE

La pulizia deve essere eseguita alla fine di ogni utilizzo in osservanza alle norme igieniche e a tutela della funzionalità della macchina.
Con l'ausilio di una spatola di legno o plastica procedere a una prima rimozione dei residui d'impasto e successivamente eseguire un'accurata pulizia della vasca, della spirale, del rompipasta e della protezione mobile, con l'ausilio di una spugna morbida ed acqua calda. Asciugare con carta assorbente per uso alimentare, quindi ripassare dapprima le superfici sopra menzionate e successivamente tutta la macchina con un panno morbido e pulito imbevuto con disinfettante specifico per macchine alimentari.

! Si raccomanda di non utilizzare in nessun caso prodotti chimici non alimentari, abrasivi o corrosivi. Evitare nel modo più assoluto di usare getti d'acqua, utensili vari, mezzi ruvidi o abrasivi quali pagliette di acciaio, spugne o altro che possano danneggiare le superfici ed in particolare compromettere la sicurezza sotto il profilo igienico.

TENSIONAMENTO DELLA CATENA SUPERIORE

Per mantenere sia l'efficienza delle prestazioni sia la sicurezza della macchina è indispensabile la verifica periodica della tensione della catena superiore. Essa va tensionata se alle verifiche si riscontra un eccessivo allentamento della stessa o se la rotazione della spirale è incostante.
Svitare le viti e smontare il pannello posto sopra la testa dell'impastatrice. Allentare di qualche giro le viti che fissano il supporto della spirale e tirare quest'ultimo fino ad ottimizzare il tensionamento della catena. Bloccare il supporto della spirale riavvitando le viti ed infine rimontare e fissare il pannello.

INGRASSAGGIO CATENE

Eseguire periodicamente l'ingrassaggio delle catene, una posta superiormente all'interno della testa e l'altra posta all'interno della carrozzeria.

Svitare le viti e togliere il pannello posto sopra la testa ed il pannello posto posteriormente alla macchina. Depositare all'interno delle catene una quantità ragionevole di grasso idoneo e sufficiente ad assicurare la lubrificazione di tutte le maglie delle catene. Ad operazione completata rimontare i due pannelli e riavvitare le viti.

5 POSSIBILI ANOMALIE

Anomalia	Causa	Soluzione
La macchina non si avvia	Mancanza di energia elettrica nella rete	Verificare il contattore generale, la presa, la spina ed il cavo di alimentazione
	Il pulsante di arresto/emergenza è bloccato	Ruotare il pulsante nel senso indicato dalle frecce
	La griglia di protezione e/o la testa sono sollevate	Abbassare correttamente sia la griglia di protezione che la testa
	La manopola dell'interruttore generale è in posizione "0"	Ruotare la manopola in posizione "1"
	La manopola del temporizzatore è in posizione "0"	Impostare la manopola da 1 a 30 minuti
La spirale gira in modo incostante	La catena è allentata	Tendere la catena secondo le modalità descritte al paragrafo 7.2.2

6 INFORMAZIONI PER LA DEMOLIZIONE E LO SMALTIMENTO

La demolizione e lo smaltimento della macchina sono ad esclusivo carico e responsabilità del proprietario che dovrà agire in osservanza delle leggi vigenti nel proprio Paese in materia di sicurezza, rispetto e tutela dell'ambiente.
Smantellamento e smaltimento possono essere affidati anche a terzi, purché si ricorra sempre a ditte autorizzate al recupero ed all'eliminazione dei materiali in questione.

☞ **INDICAZIONE**: attenersi sempre e comunque alle normative in vigore nel Paese dove si opera per lo smaltimento dei materiali ed eventualmente per la denuncia dello smaltimento.

! **ATTENZIONE**: Tutte le operazioni di smontaggio per la demolizione devono avvenire a macchina ferma e privata dell'energia elettrica di alimentazione:

- asportare tutto l'apparato elettrico;
- separare gli accumulatori presenti nelle schede elettroniche;
- rottamare la struttura della macchina tramite le ditte autorizzate;

! **ATTENZIONE**: L'abbandono della macchina in aree accessibili costituisce un grave pericolo per persone ed animali.
La responsabilità per eventuali danni a persone ed animali ricade sempre sul proprietario.

INFORMAZIONI AGLI UTENTI

ai sensi dell'art. 13 del Decreto Legislativo 25 luglio 2005,n. 151 "Attuazione delle Direttive 2002/95/CE, 2002/96/CE, 2003/108/CE, relative alla riduzione dell'uso di sostanze pericolose nelle apparecchiature elettriche ed elettroniche, nonché allo smaltimento dei rifiuti".

Il simbolo del cassonetto barrato riportato sull'apparecchiatura o sulla sua confezione indica che il prodotto alla fine della propria vita utile deve essere raccolto separatamente dagli altri rifiuti.

La raccolta della presente apparecchiatura giunta a fine vita è organizzata e gestita dal produttore. L'utente che vorrà disfarsi della presente apparecchiatura dovrà quindi contattare il produttore e seguire il sistema che questo ha adottato per consentire la raccolta separata dell'apparecchiatura giunta a fine vita.

L'adeguata raccolta differenziata per l'avvio successivo dell'apparecchiatura dismessa al riciclaggio, al trattamento e allo smaltimento ambientale compatibile contribuisce ad evitare possibili effetti negativi sull'ambiente e sulla salute e favorisce il reimpiego e/o riciclo dei materiali di cui è composta l'apparecchiatura. Lo smaltimento abusivo del prodotto da parte del detentore comporta l'applicazione delle sanzioni amministrative previste dalla norma vigente.

Iscr.Reg.Nazionale dei Produttori di AEE con il numero:
IT08020000000645

FRANÇOISE

DÉCLARATION CE DE CONFORMITÉ

Conformément à la Directive Basse Tension **2014/35/UE**, à la directive **2014/30/UE** (Compatibilité Électromagnétique), à la directive **2006/42 CE** (machines), intégrées par le marquage CE.

Conformément au Règlement (CE) N° **1935/2004** du Parlement Européen et du Conseil du **27 octobre 2004** concernant les matériaux et objets destinés à entrer en contact avec les denrées alimentaires.

Type d'appareil	**PÉTRISSEUSE**
Marque commerciale	**PIZZA GROUP S. r. l.**
Modèle	**IF ÷ IR ÷ IFM ÷ IRM** **IF-VS ÷ IR-VS** **IF 2V ÷ IR 2V**
Constructeur	**PIZZA GROUP S. r. l.**
Adresse constructeur	**Via Carnia, 15** **33078, San Vito al Tagliamento (PN)** **Italia**
Téléfphone	**+39.0434.857000**
Téléfax	**+39.0434.857001**

Les normes harmonisées ou les spécifications techniques (désignations) qui ont été appliquées en accord avec les règles de l'art en matière de sécurité en vigueur dans la CEE sont:

Normes ou autres documents normatif
EN 60335-1 EN 60335-2-64

EN 292 EN 294 EN 418

EN 55014 EN 61000-3-2 EN 61000-3-3

Ultérieures informations:
En qualité de constructeur et/ou représentant autorisé de la Société à l'intérieur de la CEE, nous déclarons sous notre propre responsabilité que les appareils sont conformes aux exigences essentielles prévues par les Directives mentionnées ci-dessus.

San Vito al Tagliamento (PN)

01.06.2016

Bellotto Carlo

Président

SOMMAIRE

1 AVERTISSEMENTS POUR LA SÉCURITÉ

AVERTISSEMENTS POUR L'INSTALLATEUR

AVERTISSEMENTS POUR L'UTILISATEUR

AVERTISSEMENTS POUR LE TECHNICIEN CHARGÉ DE L'ENTRETIEN

2 INSTALLATION

MISE À NIVEAU DE LA PÉTRISSEUSE

BRANCHEMENT AUX INSTALLATIONS

BRANCHEMENT ÉLECTRIQUE

MISE À LA TERRE

3 MISE EN SERVICE ET UTILISATION DE LA PÉTRISSEUSE

DESCRIPTION DU PANNEAU DE COMMANDES IF ÷ IR ÷ IFM ÷ IRM

PHASE DE MISE EN MARCHE IF ÷ IR ÷ IFM ÷ IRM

DESCRIPTION DU PANNEAU DE COMMANDES IF-VS ÷ IR-VS

PHASE DE MISE EN MARCHE IF-VS ÷ IR-VS

DESCRIPTION DU PANNEAU DE COMMANDES IF-2V ÷ IR-2V

PHASE DE MISE EN MARCHE IF-2V ÷ IR-2V

PHASE DE TRAVAIL

DISPOSITIFS DE SÉCURITÉ

PHASE D'EXTINCTION

4 ENTRETIEN ET NETTOYAGE

PRÉCAUTIONS DE SÉCURITÉ

ENTRETIEN ORDINAIRE INCOMBANT À L'UTILISATEUR

NETTOYAGE GÉNÉRAL

TENSIONNEMENT DE LA CHAÎNE SUPÉRIEURE

GRAISSAGE DES CHAÎNES

5 ANOMALIES POSSIBLES

6 INFORMATIONS POUR LA DÉMOLITION ET L'ÉLIMINATION

1 AVERTISSEMENTS POUR LA SÉCURITÉ

AVERTISSEMENTS POUR L'INSTALLATEUR

⚠
- Vérifier que l'emplacement prévu pour la pétrisseuse soient conformes à la règlementation locale, nationale et européenne.
- Observer les recommandations indiquées dans le présent manuel.
- Ne pas effectuer de branchements électriques volants avec des câbles provisoires ou non isolés.
- Vérifier que la mise à la terre de l'installation électrique soit efficace.
- Utiliser toujours les dispositifs de sécurité individuelle et les autres moyens de protection prévus par la loi.

RECOMMANDATION POUR L'UTILISATEUR

⚠ Les conditions environnementales du lieu où est installée la machine doivent avoir les caractéristiques suivantes :
- le lieu doit être sec ;
- les sources hydrauliques et de chaleur doivent être à une distance adéquate ;
- la ventilation et l'éclairage doivent être appropriés et conformes aux normes hygiéniques et de sécurité prévues par les lois en vigueur ;
- le sol doit avoir être plat et compact afin de favoriser un nettoyage soigné ;
- il ne doit pas y avoir en proximité de la machine d'obstacles de toute nature pouvant empêcher la ventilation normale de celle-ci.

En outre l'utilisateur doit :
- veiller à ce que les enfants ne s'approchent pas de la machine lorsque celle-ci est en marche ;
- observer les recommandations indiquées dans le présent manuel ;
- ne pas retirer ni manipuler les dispositifs de sécurité de la machine ;
- être toujours très attentif, bien observer son propre travail et ne pas utiliser la machine lorsque l'on est distrait ;
- effectuer toutes les opérations en toute sécurité et avec calme ;
- respecter les instructions et les avertissements mis en évidence par les plaquettes exposées sur la pétrisseuse.

Les plaquettes sont des dispositifs de sécurité, elles doivent donc être toujours parfaitement lisibles. Au cas où elles seraient endommagées et illisibles, il est obligatoire de les remplacer en en demandant une copie originale au Fabricant.
- À la fin de chaque utilisation, avant les opérations de nettoyage, d'entretien ou de déplacement de la machine, couper le courant électrique

AVERTISSEMENTS POUR LE TECHNICIEN CHARGÉ DE L'ENTRETIEN

⚠
- Observer les recommandations indiquées dans le présent manuel.
- Utiliser toujours les dispositifs de sécurité individuelle et les autres moyens de protection.
- Avant de commencer toute opération d'entretien, s'assurer que la pétrisseuse, au cas où elle aurait été utilisée, se soit refroidie (moteur électrique).
- Au cas où un des dispositifs de sécurité s'avérerait déréglé ou ne fonctionnant pas, la pétrisseuse doit être considérée comme en panne.
- Couper le courant électrique avant d'intervenir sur les parties électriques, électroniques et les connecteurs.

2 INSTALLATION

L'installation doit être effectuée par un personnel qualifié selon la règlementation locale, nationale et européenne.

MISE À NIVEAU DE LA PÉTRISSEUSE

En cas d'instabilité de la pétrisseuse due à l'irrégularité du sol, caler les pieds ou les roulettes avec des morceaux de plaque en caoutchouc.

BRANCHEMENT AUX INSTALLATIONS

Branchement électrique

Il suffit de brancher le câble d'alimentation au réseau électrique.
La prise du réseau électrique doit être facilement accessible et aucun déplacement ne doit être nécessaire.

☞ **Le branchement électrique (fiche) doit être facilement accessible même après l'installation de la pétrisseuse**.
La distance entre la machine et la prise ne doit pas provoquer la tension du câble d'alimentation En outre, le câble ne doit pas se trouver sous les pieds ou les roulettes d'appui de la machine.

! **Si le câble d'alimentation s'avère endommagé, celui-ci doit être remplacé par le service d'assistance technique ou par un technicien qualifié de manière à prévenir tout risque**.

MISE À LA TERRE

DANGER

⚠ **L'installation doit obligatoirement être pourvue de mise à la terre et d'interrupteur différentiel conformément aux lois en vigueur.**

3 MISE EN SERVICE ET UTILISATION DE LA PÉTRISSEUSE

DESCRIPTION DU PANNEAU DE COMMANDES IF ÷ IR ÷ IFM ÷ IRM

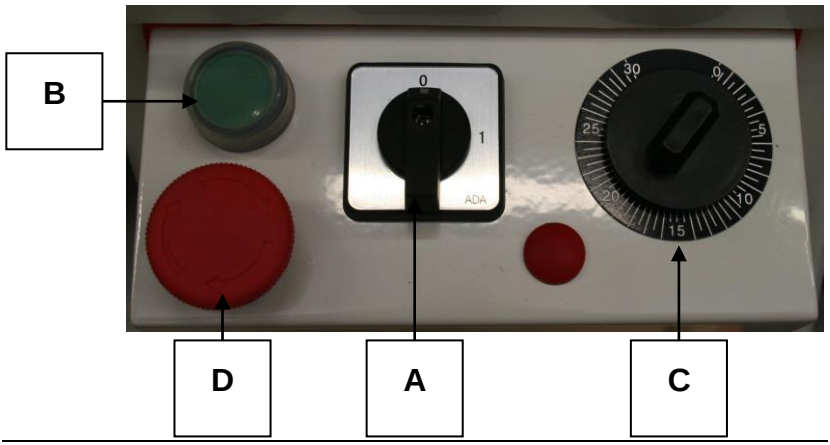

Le panneau est constitué d'un interrupteur général (**A**), d'un bouton vert de mise en marche (**B**), d'un minuteur (**C**), d'un bouton rouge pour l'arrêt d'urgence (**D**).

Le panneau permet l'allumage et l'extinction de la pétrisseuse, en règle le fonctionnement et permet le réglage.

Légende :

A = Interrupteur général (dans les versions 2V permet aussi la sélection de la vitesse)
B = Bouton vert de mise en marche
C = Minuteur
D = Bouton rouge d'arrêt d'urgence / Stop

PHASE DE MISE EN MARCHE IF ÷ IR ÷ IFM ÷ IRM

Brancher la pétrisseuse au réseau électrique et tourner l'interrupteur général **A** sur la position "**1**". Dans les versions 2V tourner l'Interrupteur en position "**1"** ou "**2"** selon la vitesse souhaitée.
Tourner la poignée du minuteur **C** sur le temps souhaité de 0 à 30 min.
Appuyer sur le bouton vert **B** pour mettre en marche aussi bien le bac que la spirale.

DESCRIPTION DU PANNEAU DE COMMANDES IF-VS ÷ IR-VS

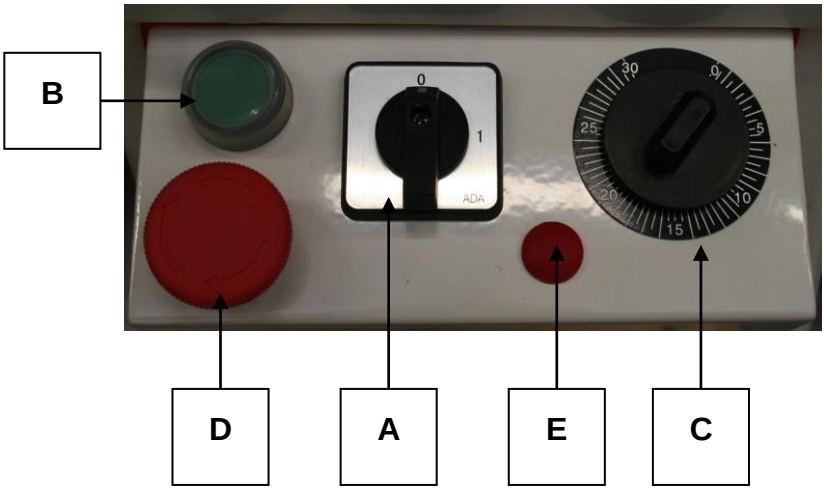

Le panneau est constitué d'un interrupteur général (**A**), d'un bouton vert de mise en marche (**B**), d'un minuteur (**C**), d'un bouton rouge pour l'arrêt d'urgence (**D**) et d'une poignée pour la variation de la vitesse (**E**).
Le panneau permet l'allumage et l'extinction de la pétrisseuse, en règle le fonctionnement et permet le réglage.

Légende:

A = Interrupteur général
B = Bouton vert de mise en marche
C = Minuteur
D = Bouton rouge d'arrêt d'urgence / Stop
E = Variateur de vitesse

PHASE DE MISE EN MARCHE IF-VS ÷ IR-VS

Brancher la pétrisseuse au réseau électrique et tourner l'interrupteur général **A** sur la position "**1**".
Tourner la poignée du minuteur **C** sur le temps souhaité de 0 à 30 min.
Appuyer sur le bouton vert **B** pour mettre en marche aussi bien le bac que la spirale.
Tourner la poignée du variateur de vitesse **E** pour augmenter ou diminuer la vitesse de rotation du bac et de la spirale.

DESCRIPTION DU PANNEAU DE COMMANDES IF-2V ÷ IR-2V

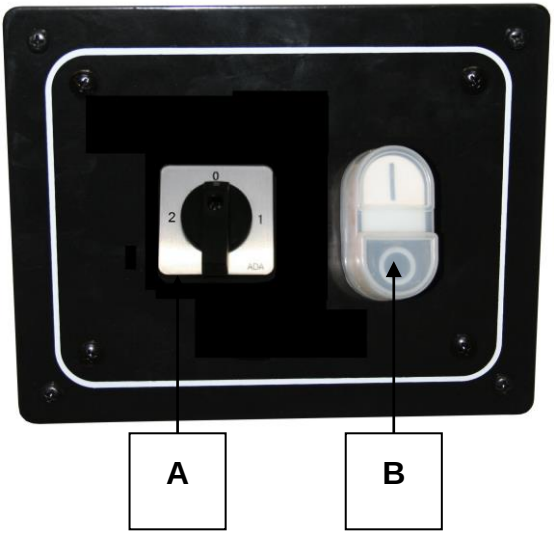

Le panneau est constitué par un sélecteur (A) à la vitesse double, par un bouton 0-1 (B)

Le panneau permet le démarrage et l'arrêt du mélangeur, il règle le fonctionnement et permet le réglage.

Légende:

A = Selecteur 1-0-2
B = Start - Stop

PHASE DE MISE EN MARCHE IF-2V ÷ IR-2V

Connectez la console à l'alimentation et tourner le sélecteur à la position «1» ou «2» en fonction de la vitesse désirée.
Appuyez sur "1" sur le bouton B pour lancer une baignoire et une spirale.
Appuyez sur "1" sur le bouton B pour arrêter la machine.

PHASE DE TRAVAIL

Avant de commencer tout cycle de travail, s'assurer que la machine soit parfaitement propre, en particulier les surfaces du bac, de la spirale et du casse-pâte en contact avec les produits alimentaires.
Après avoir soulevé la protection **F**, verser à l'intérieur du bac les ingrédients selon le type et la quantité souhaités. Baisser la protection **F**, configurer le minuteur **C** selon un temps défini et appuyer sur le bouton vert de mise en marche **B**.

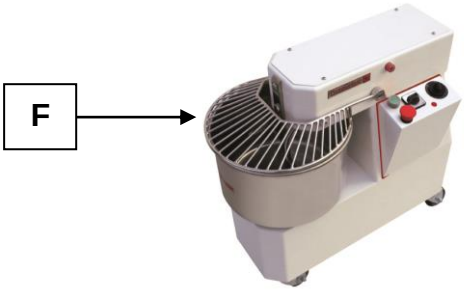

L'action effectuée par la spirale, dont le mouvement est synchronisé avec la rotation du bac, permet d'obtenir le mélange de farine, eau, sel, levure et autres éventuels produits alimentaires et la consistance souhaitée de la pâte.
Si nécessaire, pour modifier légèrement les caractéristiques et/ou la consistance de la pâte initiale, verser les ingrédients du bac à travers la grille de protection **F**.
Une fois complété le cycle de travail, arrêter la machine en appuyant sur le bouton rouge d'urgence **D**, soulever la protection mobile jusqu'à l'ouverture maximale, prélever la pâte du bac et nettoyer la machine.
Au cas où le fonctionnement de la pétrisseuse serait arrêté pour quelque raison, attendre au moins 15 secondes avant de remettre en marche la machine.
La machine avec tête soulevable et bac extractible, bien qu'étant fonctionnellement identique à la version avec tête et bac fixes, se différencie de cette dernière pour les possibilités offertes à la fin de chaque cycle de travail, soit un prélèvement plus pratique de la pâte et une phase de nettoyage plus facile.
Pour soulever la tête et extraire le bac procéder selon les modalités suivantes : arrêter la machine en appuyant sur le bouton rouge d'urgence **D** ; débrancher la fiche de la prise d'alimentation électrique ; soulever complètement la protection mobile ; tirer horizontalement sur le pivot, moyennant la poignée située sur le côté droit de la machine jusqu'à débloquer la tête ; soulever la tête à l'aide du petit piston sous-jacent ; tourner dans le sens des aiguilles d'une montre le disque situé sous le bac et enfin extraire le bac pour le prélèvement de la pâte. Une fois terminé le nettoyage de la machine, remonter le bac en procédant en sens inverse et en s'assurant que les pivots sous le bac soient correctement insérés à l'intérieur des trous situés sur la machine.

! Avant de prélever la pâte, effectuer toujours la procédure d'extinction.

DISPOSITIFS DE SÉCURITÉ

La pétrisseuse est munie de certains dispositifs de sécurité pour la sauvegarde de l'utilisateur, soit d'une grille de protection mobile et d'un dispositif de contrôle si la grille est abaissée. Les pétrisseuses avec tête soulevable et bac extractible sont également munies d'un dispositif de contrôle si la tête est abaissée ou soulevée, d'un pivot de blocage de la tête en position abaissée, d'un dispositif de contrôle si le bas est inséré ou extrait et enfin d'un disque de blocage du bac.

! Avant de procéder avec la phase de travail, contrôler un par un les différents dispositifs de sécurité. Ceux-ci sont efficaces lorsque :

- en soulevant la grille, la machine s'arrête ;
- en soulevant la tête, la machine s'arrête ou ne se remet pas en marche ;
- en extrayant le bac, la machine s'arrête ou ne se remet pas en marche ;
- en tirant modérément vers le haut, aussi bien le bac que la tête restent bloqués.

PHASE D'EXTINCTION

Pour éteindre la pétrisseuse, appuyer sur le bouton rouge d'urgence **D** et tourner la poignée de l'interrupteur général **A** sur la position "**0**".

4 ENTRETIEN ET NETTOYAGE

PRÉCAUTIONS DE SÉCURITÉ

! Avant d'effectuer toute opération d'entretien, nettoyage compris, adopter les précautions suivantes :

- s'assurer que l'interrupteur général soit désactivé ;
- s'assurer que l'alimentation ne puisse pas être réactivée accidentellement. Débrancher la fiche de la prise d'alimentation électrique ;
- utiliser les dispositifs de protection individuelle prévus par la directive 89/391/CEE ;
- opérer toujours avec des équipements appropriées pour l'entretien ;
- une fois terminés l'entretien ou les opérations de réparation et avant de remettre en marche la pétrisseuse, réinstaller toutes les protections et réactiver tous les dispositifs de sécurité.

ENTRETIEN ORDINAIRE INCOMBANT À L'UTILISATEUR

La pétrisseuse nécessite d'un simple mais fréquent et soigné nettoyage afin de toujours garantir un rendement efficace et un fonctionnement régulier.

NETTOYAGE GENERAL

Le nettoyage doit être effectué à la fin de chaque utilisation conformément aux normes hygiéniques et pour sauvegarder les fonctionnalités de la machine.
À l'aide d'une spatule en bois ou en plastique, retirer d'abord les résidus de pâte, puis effectuer un nettoyage soigné du bac, de la spirale, du casse-pâte et de la protection mobile, à l'aide d'une éponge et d'eau chaude. Essuyer avec du papier absorbant à usage alimentaire, et passer de nouveau sur toutes les surfaces susmentionnées puis sur toute la machine un chiffon souple et propre, imbibé d'un désinfectant spécifique pour machines alimentaires.

! Il est recommandé de ne jamais utiliser de produits chimiques non alimentaires, abrasifs ou corrosifs. Éviter de manière absolue les jets d'eau, les ustensiles divers, les moyens rugueux ou abrasifs tels que les pailles de fer, les éponges ou autre pouvant endommager les surfaces et en particulier compromettre la sécurité d'un point de vue hygiénique.

TENSIONNEMENT DE LA CHAÎNE SUPÉRIEURE

Afin de maintenir l'efficacité des prestations et la sécurité de la machine, il est indispensable de contrôler périodiquement la tension de la chaîne supérieure. Celle-ci doit être tendue si durant les contrôles se vérifie un relâchement excessif de celle-ci ou si la rotation de la spirale est inconstante.
Dévisser les vis et démonter le panneau situé sur la tête de la pétrisseuse. Desserrer de quelque tour les vis qui fixent le support de la spirale et tirer sur celui-ci jusqu'à optimiser le tensionnement de la chaîne. Bloquer le support de la spirale en revissant les vis et enfin remonter et fixer le panneau.

GRAISSAGE DES CHAINES

Effectuer périodiquement le graissage des chaînes, une située supérieurement à l'intérieur de la tête et l'autre située à l'intérieur de la carrosserie.
Dévisser les vis et retirer le panneau situé sur la tête et le panneau situé à l'arrière de la machine. Déposer à l'intérieur des chaînes une quantité raisonnable de graisse adéquate et suffisante pour assurer la lubrification de toutes les mailles des chaînes. Une fois l'opération terminée, remonter les deux panneaux et revisser les vis.

5 ANOMALIES POSSIBLES

Anomalie	Cause	Solution
La machine ne se met pas en marche	Coupure d'énergie électrique dans le réseau	Contrôler le compteur général, la prise, la fiche et le câble d'alimentation
	Le bouton d'arrêt/urgence est bloqué	Tourner le bouton dans le sens indiqué par les flèches
	La grille de protection et/ou la tête sont soulevées	Abaisser correctement aussi bien la grille de protection que la tête
	La poignée de l'interrupteur général est sur la position “0”	Tourner la poignée sur la position “1”
	La poignée du temporisateur est sur la position “0”	Configurer la poignée de 1 à 30 minutes
La spirale tourne de manière inconstante	La chaîne est relâchée	Tendre la chaîne selon les modalités décrites au paragraphe 7.2.2

6 INFORMATIONS POUR LA DÉMOLITION ET L'ÉLIMINATION

La démolition et l'élimination de la machine sont une charge et une responsabilité exclusives du propriétaire qui devra agir conformément aux lois en vigueur dans son propre Pays en matière de sécurité, respect et sauvegarde de l'environnement
Le démantèlement et l'élimination peuvent être confiés à des tiers, à condition que ceux-ci soient des sociétés autorisées pour la récupération et l'élimination des matériaux en question.

☞ **INDICATION** : respecter toujours et dans tous les cas les normes en vigueur dans le Pays où est effectuée l'élimination des matériaux et éventuellement pour en dénoncer la mise au rebut.

! **ATTENTION** : Toutes les opérations de démontage pour la démolition doivent être effectuées lorsque la machine est à l'arrêt et débranchée de l'alimentation électrique :

- retirer tous les dispositifs électriques ;
- séparer les accumulateurs présents sur les cartes électroniques ;
- mettre au rebut la structure de la machine moyennant les sociétés autorisées.

! **ATTENTION** : L’abandon de la machine dans des zones accessibles constitue un grave danger pour les personnes et les animaux.
La responsabilité pour tout dommage à des personnes et animaux retombe sur le propriétaire.

INFORMATIONS AUX UTILISATEURS

L'appareil rentre dans le domaine d'application des directives européennes 2002/95/CE, 2002/96/CE, 2003/108/CE qui prescrivent de ne pas éliminer ce produit avec les déchets domestiques normaux. Pour éviter de possibles dommages à l'environnement ou à la santé de l'homme, nous vous prions de séparer ce produit des autres déchets afin de pouvoir le recycler en toute sécurité du point de vue de l'environnement.

Pour plus d'informations sur les centres de collecte, contacter le bureau municipal ou le revendeur chez lequel vous avez acheté le produit.

ENGLISH

DECLARATION CE OF CONFORMITY

In agreement with the Low Voltage Directive **2014/35/UE**, with the directive **2014/30/UE**, with the directive **2006/42 EEC** (machines), integrated by the CE mark.

In agreement with Regulation (EC) No. **1935/2004** of the European Parliament and of the Council of **27 October 2004** on materials and articles intended to come into contact with food.

Type of appliance / Machine	**KNEADING MACHINE**
Trademark	**PIZZA GROUP S. r. l.**
Model	**IF ÷ IR ÷ IFM ÷ IRM** **IF-VS ÷ IR-VS** **IF 2V ÷ IR 2V**
Manufacturer	**PIZZA GROUP S. r. l.**
	Via Carnia, 15
Address	**33078, San Vito al Tagliamento (PN)**
	Italia
Telephone	**+39.0434.857000**
Telefax	**+39.0434.857001**

The harmonised standards or technical specifications (designations) that have been applied in agreement with the highest professional standards on safety in force in the EEC are:

Standards or other normative documents

EN 60335-1 EN 60335-2-64

EN 292 EN 294 EN 418

EN 55014 EN 61000-3-2 EN 61000-3-3

Other information:

In my capacity as manufacturer and/or authorised representative of the company inside the EEC, I hereby declare, under my own responsibility that the appliances conform to the essential requirements of the aforementioned Directives.

San Vito al Tagliamento (PN)

01.06.2016

Bellotto Carlo

President

INDEX

1 SAFETY RECOMMENDATIONS

WARNINGS FOR THE INSTALLER

WARNINGS FOR THE USER

WARNINGS FOR THE MAINTENANCE TECHNICIAN

2 INSTALLATION

KNEADING MACHINE LEVELLING

EQUIPMENT HOOK-UP

ELECTRICAL CONNECTION

GROUND CONNECTION

3 KNEADING MACHINE START-UP AND USE

COMMAND PANEL DESCRIPTION IF ÷ IR ÷ IFM ÷ IRM

START-UP PHASE IF ÷ IR ÷ IFM ÷ IRM

COMMAND PANEL DESCRIPTION IF-VS ÷ IR-VS

START-UP PHASE IF-VS ÷ IR-VS

COMMAND PANEL DESCRIPTION IF-2V ÷ IR-2V

START-UP PHASE IF-2V ÷ IR-2V

WORKING PHASE

SAFETY DEVICES

SHUT-DOWN PHASE

4 MAINTENANCE AND CLEANING

SAFETY PRECAUTIONS

ORDINARY MAINTENANCE FOR THE USER

GENERAL CLEANING

UPPER CHAIN TENSIONING

GREASING THE CHAINS

5 POSSIBLE FAULTS

6 INFORMATION FOR DEMOLITION AND DISPOSAL

1 SAFETY RECOMMENDATIONS

WARNINGS FOR THE INSTALLER

⚠
- Check that the location of the kneading machine is in compliance with local, national and European regulations.
- Adhere to the instructions in this manual.
- Do not execute electrical connections using temporary or uninsulated cables.
- Check that the ground connection of the electrical system is functioning properly.
- Always use individual safety devices and other means of protection in compliance with the law.

WARNINGS FOR THE USER

⚠ The conditions in the surrounding area where the machine will be installed must have the following characteristics:

- the area must be dry;
- the area must have water and heat sources at an adequate distance;
- ventilation and lighting must be suitable and comply with the hygiene and safety standards foreseen by current laws;
- the floor must be flat and compact to facilitate thorough cleaning;
- there must be no obstacles of any kind in the immediate vicinity of the machine that could effect the machine's normal ventilation.

In addition, the user must:
- make certain to keep children away from the machine when it is operating;
- adhere to the instructions in this manual.
- not remove or tamper with the safety devices on the machine;
- always pay careful attention to the work at hand and not use the machine when in a distracted state;
- perform all operations with maximum safety and calm;
- respect the instructions and warnings displayed on the machine labels.

The labels are accident prevention devices, and therefore must always be perfectly legible. If these should be damaged and illegible, it is mandatory to replace them by requesting replacements from the Manufacturer.
- At the end of each working shift, before cleaning, maintenance or transfer operations, disconnect electrical power.

WARNINGS FOR THE MAINTENANCE OPERATOR

⚠
- Observe the instructions indicated in this manual.
- Always use individual safety devices and other protection means.
- Before starting any maintenance operations, make sure that the kneading machine, it was used, is cooled down (electric motor).
- If any of the safety devices is worn or faulty, the kneading machine is also considered faulty and not to be used.
- Disconnect electrical power before intervening on electrical or electronic parts and connectors.

2 INSTALLATION

Installation must be executed by qualified personnel in compliance with local, national and European regulations.

KNEADING MACHINE LEVELLING

If the machine is unstable due to floor irregularity, adjust the support feet or wheels by inserting rubber pieces.

EQUIPMENT HOOK-UP

Electrical connection

It is sufficient to connect the power supply cable to the electrical mains power supply.
The electrical outlet must be easy to access, no moving should be necessary.

☞ **The electrical connection (plug) must be easily accessible, also following kneading machine installation**.

The distance between the machine and the socket must be adequate to not cause tension in the power supply cable. In addition, the cable must not be located beneath the machine support feet or wheel.

! **If the electrical power supply cable is damaged, it must be replaced by the technical assistance service or by a qualified technician to prevent any risks.**

GROUND CONNECTION

DANGER

⚠ **It is mandatory that the electrical system is equipped with a ground connection and differential switch that comply with currently enforced laws**.

3 KNEADING MACHINE START-UP AND USE

COMMAND PANEL DESCRIPTION IF ÷ IR ÷ IFM ÷ IRM

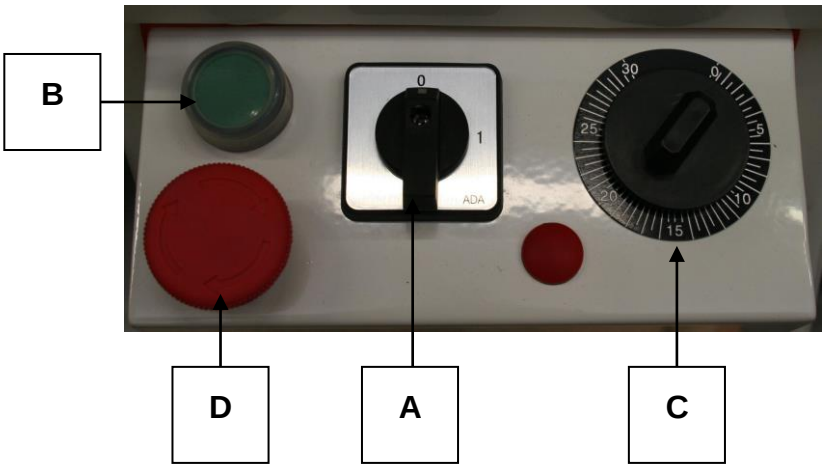

The panel consists of a main switch (**A**), a green start button (**B**), a timer (**C**), a red emergency stop button (**D**).

The panel permits start-up and stopping of the kneading machine, and regulates functioning and settings.

Legend:

A = Mainswitch (the 2V versions also allow speed selection)
B = Green start button
C = Timer
D = Red emergency stop button

START-UP PHASE IF ÷ IR ÷ IFM ÷ IRM

Connect the kneading machine to the electrical mains and turn the main switch **A** to the position "**1**". In the 2V versions, rotate the switch to the "1" or "2" position according to the desired speed.
Turn the timer knob **C** to the desired time from 0 to 30 min.
Press the green button **B** to start both the tank and the spiral.

COMMAND PANEL DESCRIPTION IF-VS ÷ IR-VS

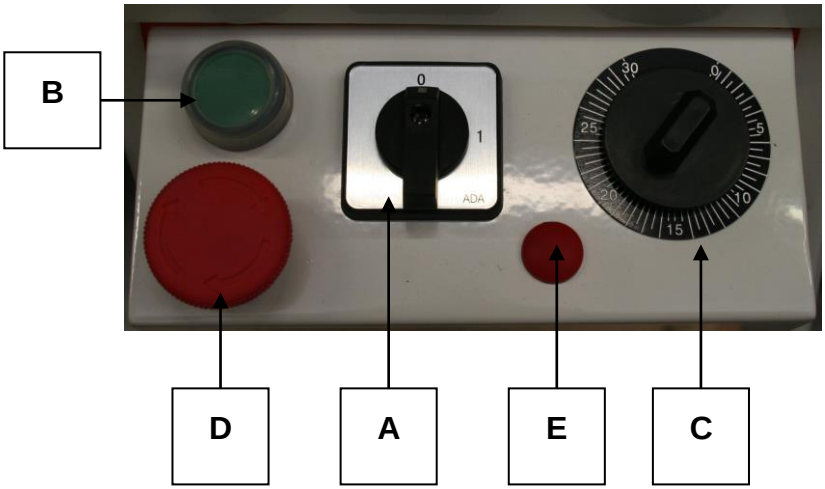

The panel consists of a main switch (**A**), a green start button (**B**), a timer (**C**), a red emergency stop button (**D**) and a speed adjustment knob (**E**).

The panel permits start-up and stopping of the kneading machine, and regulates functioning and settings.

Legend:

A = Main switch
B = Green start button
C = Timer
D = Red emergency stop button
E = Speed regulator

START-UP PHASE IF-VS ÷ IR-VS

Connect the kneading machine to the electrical mains and turn the main switch **A** to the position "**1**".
Turn the timer knob **C** to the desired time from 0 to 30 min.
Press the green button **B** to start both the tank and the spiral.
Turn the speed regulator knob **E** to increase or decrease the speed of the tank and spiral.

COMMAND PANEL DESCRIPTION IF-2V ÷ IR-2V

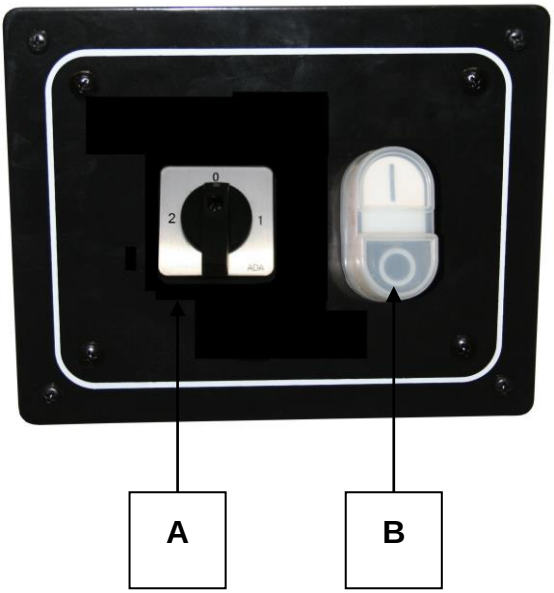

The panel is made by a selector (A) to the double speed, by a button 0-1 (B)

The panel allows the switching on and off of the mixer, it regulates the operation and allows the setting.

Legend:

A = Selector 1-0-2
B = START - STOP

START UP ÷ IR-IF-2V 2V

Connect the mixer to the power supply and turn the selector switch to position "1" or "2" depending on the desired speed.
Press "1" on the B button to initiate both a bath and a spiral.

WORKING PHASE

Prior to starting each work cycle, make sure that the machine is perfectly clean, especially the surface of the tank, the spiral and the dough breaker in contact with food products.
Whenever necessary, proceed with cleaning .

After having lifted the protection **F**, pour the desired quantities of ingredients into the tank.

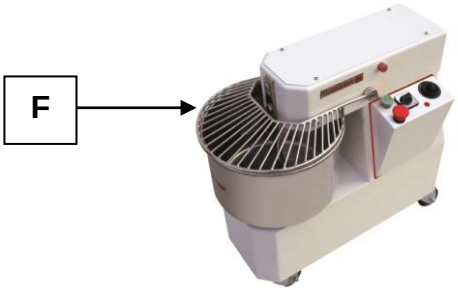

Lower the protection **F**, set the timer **C** at a defined time and press the green start button **B**.
The action created by the spiral, synchronized with tank rotation, obtains a mixture of flour, water, salt, yeast and other possible ingredients in the desired consistency.
If needed, to slightly modify the characteristics and/or consistency of the starter dough, pour the ingredients from the tank through the protection grating **F**.
Once the work cycle is completed, stop the machine by pressing the red emergency button **D**, lift the mobile protection to its maximum opening point, remove the dough from the tank and proceed with machine cleaning.
If kneading machine operations are stopped for any reason, wait at least 15 seconds before restarting.
Even though it is functionally identical to other versions, the machine with liftable head and removable tank is differentiated for easier removal of the dough at the end of the working cycle, as well as easier cleaning.
To lift the head and extract the tank, proceed as follows: stop the machine by pressing the red emergency button **D**; disconnect the plug from the electrical power supply; completely remove the mobile protection; horizontally pull the pin using the handle located on the right side of the machine until the head is released; lift the head using the lower piston; turn the disc located under the tank in a clockwise direction and extract the tank to remove the dough.
After finishing machine cleaning, reassemble the tank by following the previously described steps in a backwards order, making sure that the pins beneath the tank are correctly inserted into the holes on the machine.

! Before removing the dough, always perform the shut-down steps

SAFETY DEVICES

The kneading machine is equipped with safety devices to protect the user, including a mobile protective grating and a device that ensures the grating is lowered. The kneading machines with liftable heads and removable tanks are also equipped with a device that checks whether the head is lifted or lowered, a blocking pin for the head in a lowered position, a device that checks whether the tank is inserted or removed and a tank blocking disc.

! Before proceeding with working phases, check the status of the various safety devices. These are in a good state when:

- the machine stops when the grating is lifted;
- the machine stops and will not start when the machine head is lifted;
- the machine stops and will not start when the tank is removed;
- when pulling the tank and the head slightly upwards, they remain blocked in their positions.

SHUT-DOWN PHASE

To shut down the kneading machine, press the red emergency button **D** and turn the main switch knob **A** to the position "**0**".

4 MAINTENANCE AND CLEANING

SAFETY PRECAUTIONS

! Before performing any maintenance operations, including cleaning, take the following precautions:

- make certain that the main switch is disinserted;
- make certain that the electrical power cannot be accidentally reinserted. Disconnect the plug from the electrical power socket;
- use individual protection devices in compliance with the directive 89/391/CEE;
- always operate using appropriate maintenance tools;
- once maintenance and repairs are finished, before starting up the kneading machine, reinstall all of the protection devices and reactivate all of the safety devices.

ORDINARY MAINTENANCE FOR THE USER

The kneading machine requires simple, frequent and careful cleaning to ensure efficient, regular functioning.

GENERAL CLEANING

The machine must be cleaned at the end of each use, in compliance with the hygiene regulations and to safeguard machine operation.
Using a wooden or plastic spatula, proceed by removing dough residues, and then thoroughly clean the tank, spiral, dough breaker and mobile protection using a soft sponge and warm water. Dry with paper towels, and then pass over all of the aforementioned parts and the entire machine with a soft cloth and a disinfectant solution for use in food preparation areas.

! It is recommended to never use chemical products which are not specific for food preparation areas, abrasives or corrosives for any reason. Avoid by all means using water jets, tools, rough or abrasive instruments, such as steel wool, brillo sponges or any other item which could damage the surface of the machine, and especially those that could compromise health safety.

UPPER CHAIN TENSIONING

To maintain both performance and safety of the machine, it is indispensable to execute periodical controls of the upper chain tension. The chain should be tensioned if these controls detect excessive loosening of the chain, or if the spiral rotation is not constant.
Unscrew the screws and disassemble the panel located above the kneading machine head. Loosen the screws by a few turns that mount the spiral support and pull the spiral support until the chain is tensioned. Block the spiral support by tightening the screws and then reassemble and mount the panel.

GREASING THE CHAINS

Periodically grease the chains, one located in the upper interior of the head and the other located inside of the machine body.
Unscrew the screws and remove the panel over the head and the panel in the rear of the machine. Deposit a reasonable quantity of suitable grease inside of the chain and make sure to lubricate all of the chain links. Once finished, reassemble the two panel and tighten the screws.

5 POSSIBLE FAULTS

Fault	Cause	Remedy
The machine does not start	Lack of electrical energy	Check the main switch, socket, plug and power supply cable
	The emergency stop button is inserted	Turn the button in the direction indicated by the arrow
	The protection grating and/or the head are lifted	Correctly lower both the protective grating and the head
	The main switch knob is in position “0”	Turn the knob to position “1”
	The timer knob is in position “0”	Set the knob from 1 to 30 minutes
The spiral turns sporadically	The chain is loose	Tension the chain as described in section 7.2.2

6 INFORMATION FOR DEMOLITION AND DISPOSAL

Demolition and disposal of the machine is the sole responsibility of the owner, who must perform these tasks in compliance of currently enforced laws pertaining to safety and environmental protection in the country where the machine is installed.
Disassembly and disposal can also be performed by a third party, as long as an authorized entity for recovery and demolition of the materials in question.

☞ **INSTRUCTION**: always adhere to the currently enforced laws pertaining to disposal of materials and in the country where the machine is installed , and any possible necessity for registration of demolition.

! **WARNING**: All disassembly operations for demolition must take place with the machine shut-down and disconnected from the electrical power supply.

- remove all electrical apparatus;
- separate the accumulators on the electronic cards;
- dispose of the machine structure through authorized entities;

! **WARNING**: Abandoning the machine in accessible areas constitutes grave danger for persons and animals.

Responsibility for possible damages to persons and animals is falls exclusively on the owner.

USER INFORMATION

The equipment falls under application of the European Directives 2002/95/CE, 2002/96/CE, 2003/108/CE which states to never dispose of this product together with normal domestic waste. To prevent any possible damage to the environment or to human health, please keep this product separately from other waste so it can be recycled safely from an environmental point of view.

For more information about collection centers please contact the town office or the dealer you bought the product from.

РУССО

ДЕКЛАРАЦИЯ CE СООТВЕТСТВИИ

Соответствует Директиве о низком напряжении **2014/35/UE**, Директиве **2014/30/UE** (Электромагнитная совместимость), Директиве **2006/42 EC** (машины), дополненным маркировкой ЕС.

Соответствует Регламенту (ЕС) № **1935/2004** Европейского Парламента и Совета от **27 октября 2004** г. относительно материалов и предметов, предназначенных для контакта с пищей.

Тип оборудования/Машина	**ТЕСТОМЕСИЛЬНАЯ МАШИНА СПИРАЛЬНОГО ТИПА**
Торговый знак	**PIZZA GROUP S. r. l.**
Модель	**IF ÷ IR ÷ IFM ÷ IRM** **IF-VS ÷ IR-VS** **IF 2V ÷ IR 2V**
Изготовитель	**PIZZA GROUP S. r. l.**
Адрес	**Via Carnia, 15** **33078, San Vito al Tagliamento (PN)** **Italia**
Телефон	**+39.0434.857000**
Телефакс	**+39.0434.857001**

Согласованными нормами или техническими требованиями (обозначения), примененными в соответствии с действующими в ЕЭС безукоризненными правилами в сфере техники безопасности, являются:

Нормативы или другие нормативные документы

EN 60335-1 EN 60335-2-64

EN 292 EN 294 EN 418

EN 55014 EN 61000-3-2 EN 61000-3-3

Дополнительная информация:

Являясь изготовителем и/или уполномоченным представителем компании в ЕЭС, под свою ответственность заявляет, что аппараты соответствуют основным требованиям, предусмотренным в вышеперечисленных директивах

San Vito al Tagliamento (PN)

01.06.2016

Беллотто Карло

Президент

УКАЗАТЕЛЬ

1 ПРЕДУПРЕЖДЕНИЯ ДЛЯОБЕСПЕЧЕНИЯ БЕЗОПАСНОСТИ

ПРЕДУПРЕЖДЕНИЯ ДЛЯ МОНТАЖНИКА

ПРЕДУПРЕЖДЕНИЯ ДЛЯ ПОЛЬЗОВАТЕЛЯ

ПРЕДУПРЕЖДЕНИЯ ДЛЯ ТЕХНИКА-ЭКСПЛУАТАЦИОННИКА

2 МОНТАЖ

ВЫРАВНИВАНИЕ ТЕСТОМЕСИЛЬНОЙ МАШИНЫ

ПОДСОЕДИНЕНИЕ К СИСТЕМАМ

ЭЛЕКТРИЧЕСКОЕ СОЕДИНЕНИЕ

ЗАЗЕМЛЕНИЕ

3 ВВОД В ЭКСПЛУАТАЦИЮ И ЭКСПЛУАТАЦИЯ ТЕСТОМЕСИЛЬНОЙ МАШИНЫ

ОПИСАНИЕ ПАНЕЛИ УПРАВЛЕНИЯ IF ÷ IR ÷ IFM ÷ IRM

ФАЗА ЗАПУСКА IF ÷ IR ÷ IFM ÷ IRM

ОПИСАНИЕ ПАНЕЛИ УПРАВЛЕНИЯ IF-VS ÷ IR-VS

ФАЗА ЗАПУСКА IF-VS ÷ IR-VS

ОПИСАНИЕ ПАНЕЛИ УПРАВЛЕНИЯ IF-2V ÷ IR-2V

ФАЗА ЗАПУСКА IF-2V ÷ IR-2V

РАБОЧАЯ ФАЗА

ЗАЩИТНЫЕ УСТРОЙСТВА

ФАЗА ВЫКЛЮЧЕНИЯ

4 ТЕХОБСЛУЖИВАНИЕ И ОЧИСТКА

МЕРЫ ПРЕДОСТОРОЖНОСТИ ДЛЯ ОБЕСПЕЧЕНИЯ БЕЗОПАСНОСТИ

ОЧЕРЕДНОЕ ТЕХОБСЛУЖИВАНИЕ, ВЫПОЛНЯЕМОЕ ПОЛЬЗОВАТЕЛЕМ

ОБЩАЯ ОЧИСТКА

НАТЯЖЕНИЕ ВЕРХНЕЙ ЦЕПИ

СМАЗКА ЦЕПЕЙ

5 ВОЗМОЖНЫЕ НЕИСПРАВНОСТИ

6 ИНФОРМАЦИЯ В ОТНОШЕНИИ УНИЧТОЖЕНИЯ И УТИЛИЗАЦИИ

1 ПРЕДУПРЕЖДЕНИЯ ДЛЯОБЕСПЕЧЕНИЯ БЕЗОПАСНОСТИ

ПРЕДУПРЕЖДЕНИЯ ДЛЯ МОНТАЖНИКА

⚠
- Проверить, что предрасположения для монтажа тестомесильной машины соответствуют местным, национальным и европейским положениям.
- Соблюдать предписания, указанные в настоящем руководстве.
- Не осуществлять временные электрические соединения с временными или неизолированными проводами.
- Проверить, что заземление электрической системы является эффективным.
- Всегда использовать средства индивидуальной защиты, а также другие защитные средства, предусмотренные законом.

ПРЕДУПРЕЖДЕНИЯ ДЛЯ ПОЛЬЗОВАТЕЛЯ

⚠ Место установки машины должно обладать следующими характеристиками окружающей среды:
- должно быть сухим;
- должно находиться на надлежащем расстоянии от источников воды и тепла;
- соответствующая вентиляция и освещение должны отвечать правилам гигиены и техники безопасности, предусмотренным действующим законодательством;
- пол должен быть ровным и плотным, чтобы способствовать тщательной сборке;
- непосредственно вблизи машины не должны находиться какие-либо препятствия, которые могут оказать влияние на нормальную вентиляцию машины.

Кроме того, пользователь должен:
- соблюдать осторожность, чтобы дети не приближались к работающей машине;
- соблюдать предписания, указанные в настоящем руководстве.
- не снимать или нарушать защитные устройства машины;
- всегда соблюдать максимальную осторожность, то есть следить за собственной работой и не использовать машину в случае если Вы невнимательны;
- выполнять все операции с максимальной уверенностью и спокойствием;
- соблюдать инструкции и предупреждения, указанные на табличках, позиционированных на тестомесильной машине.

Таблички являются предохранительными устройствами, поэтому должны быть всегда разборчивыми. Если они являются поврежденными и неразборчивыми, необходимо произвести замену, запрашивая оригинальную запасную часть на заводе-изготовителе.
- Каждый раз по окончании использования машины, перед проведением операций по очистке, техническому обслуживанию или перемещению машины, отключать электропитание.

ПРЕДУПРЕЖДЕНИЯ ДЛЯ ТЕХНИКА-ЭКСПЛУАТАЦИОННИКА

⚠
- Соблюдать предписания, указанные в настоящем руководстве.
- Всегда использовать средства индивидуальной защиты и другие защитные средства.
- Перед началом проведения какой-либо операции техобслуживания, убедиться, что тестомесильная машина, в случае её использования, охлаждена (электродвигатель).
- Если даже одно из защитных устройств не отрегулировано или не функционирует, тестомесильная машина должна считаться неработающей.
- Отключить электропитание перед проведением работ на электрических, электронных компонентах и на соединителях.

2 МОНТАЖ

Монтаж должен осуществляться квалифицированным персоналом, в соответствии с местными, национальными и европейскими положениями.

ВЫРАВНИВАНИЕ ТЕСТОМЕСИЛЬНОЙ МАШИНЫ

В случае неустойчивости тестомесильной машины, вызванной неровностью пола, установить резиновые прокладки под ножки или колёса.

ПОДСОЕДИНЕНИЕ К СИСТЕМАМ

Электрическое соединение

Достаточно подсоединить токоподводящий кабель к электрической сети.
Розетка электрической сети должна быть легко доступна, чтобы не было необходимости дополнительно перемещения для подключения.

☞ **Электрическое соединение (вилка) должна быть легко доступной также и после монтажа тестомесильной машины**.

Расстояние между машиной и розеткой должно быть таким, чтобы не вызывать натяжение токоподводящего кабеля. Кроме того, кабель никогда не должен находиться под опорными ножками или колёсами машины.

! **Если токоподводящий кабель повреждён, он подлежит замене службой технического обслуживания или квалифицированным техником в целях предотвращения всех рисков**.

ЗАЗЕМЛЕНИЕ

ОПАСНОСТЬ

⚠ **Обязательно, чтобы устройство было оснащено заземлением и дифференциальным выключателем в соответствии с действующими законами**.

3 ВВОД В ЭКСПЛУАТАЦИЮ И ЭКСПЛУАТАЦИЯ ТЕСТОМЕСИЛЬНОЙ МАШИНЫ

ОПИСАНИЕ ПАНЕЛИ УПРАВЛЕНИЯ IF ÷ IR ÷ IFM ÷ IRM

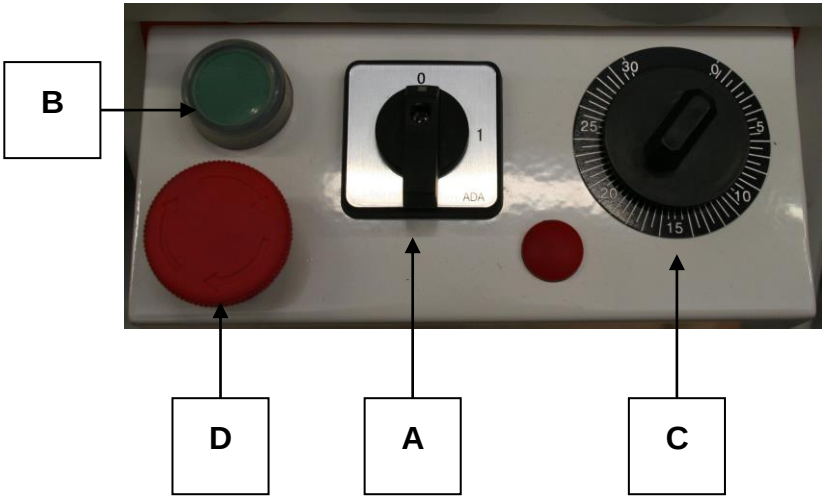

Панель состоит из главного выключателя (**A**), зелёной кнопки запуска (**B**), таймера (**C**), красной кнопки аварийной остановки (**D**).
Панель обеспечивает включение и выключение тестомесильной машины, регулирует функционирование и обеспечивает установку.

Обозначения:

A = Главный выключатель (в моделях 2B также позволяет выбрать скорость)
B = Зелёная кнопка запуска
C = Таймер
D = Красная аварийная кнопка / Остановка

ФАЗА ЗАПУСКА IF ÷ IR ÷ IFM ÷ IRM

Подсоединить тестомесильную машину к электрической сети и повернуть главный выключатель **A** в положение "**1**". В моделях 2B повернуть вылючатель в положение "**1"** или "**2",** в зависимости от желаемой скорости.
Повернуть ручку таймера **C** на желаемое время от 0 до 30 мин.
Нажать зелёную кнопку **B** для запуска как дежи, так и спирали.

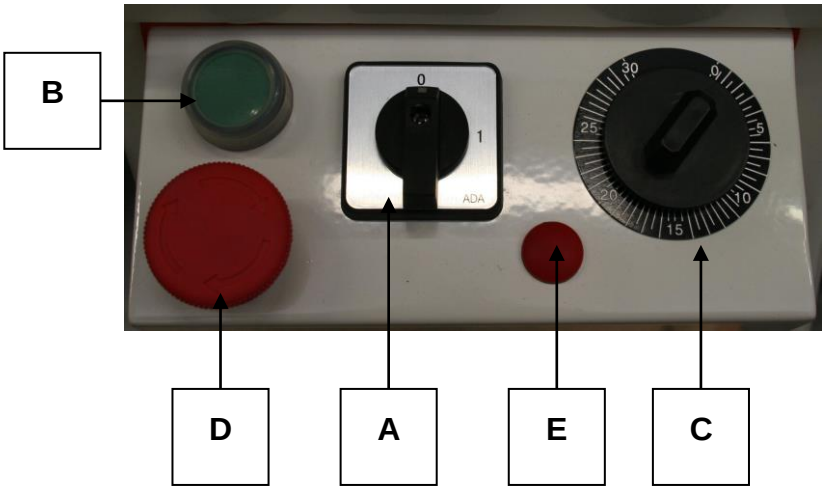

Панель состоит из главного выключателя (**A**), зелёной кнопки запуска (**B**), таймера (**C**), красной кнопки аварийной остановки (**D**) и ручки для изменения скорости (**E**).
Панель обеспечивает включение и выключение тестомесильной машины, регулирует функционирование и обеспечивает установку.

Обозначения:

A = Главный выключатель
B = Зелёная кнопка запуска
C = Таймер
D = Красная аварийная кнопка / Остановка
E = Вариатор скорости

ФАЗА ЗАПУСКА

Подсоединить тестомесильную машину к электрической сети и повернуть главный выключатель **A** в положение "**1**".
Повернуть ручку таймера **C** на желаемое время от 0 до 30 мин.
Нажать зелёную кнопку **B** для запуска как дежи, так и спирали.
Повернуть ручку вариатора скорости **E** для увеличения или уменьшения скорости вращения дежи и спирали.

ОПИСАНИЕ ПАНЕЛИ УПРАВЛЕНИЯ IF-2V ÷ IR-2V

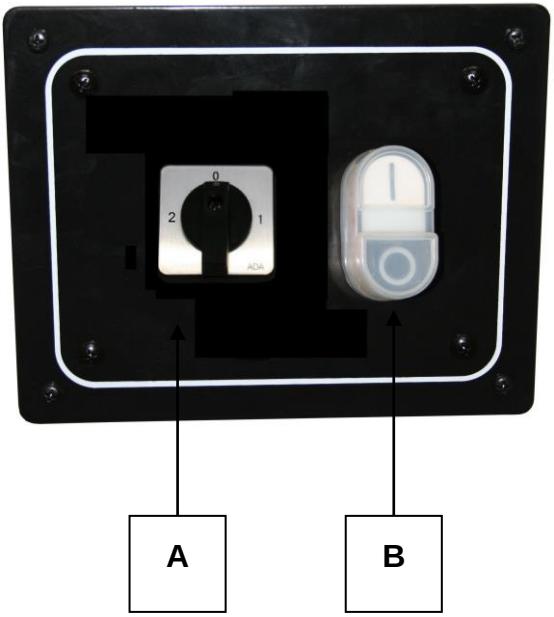

Панель выполнена с помощью селектора (A) на вторую скорость и с помощью кнопки 0-1 (B)

Панель позволяет включение и выключение смесителя, он регулирует работу и позволяет установку.

Легенда:

A = Набрать 1-0-2
B = СТАРТ - СТОП

ФАЗА ЗАПУСКА IF-2V ÷ IR-2V

Подключите миксер к источнику питания и установите переключатель в положение "1" или "2" в зависимости от желаемой скорости.
Нажмите "1" на кнопке B инициировать и ванна и спирали.
Нажмите "1" на кнопке B, чтобы остановить машину.

РАБОЧАЯ ФАЗА

Перед началом каждого рабочего цикла убедиться, что машина находится в идеальной чистоте, в особенности поверхности дежи, спирали и тестомеса, соприкасающиеся с пищевыми продуктами.
После поднятия защиты **F**, вылить вовнутрь дежи ингредиенты желаемого типа и количества. Опустить защиту **F**, установить таймер **C** на определённое время и нажать зелёную кнопку запуска **B**.

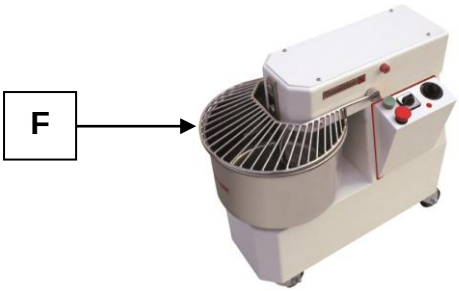

Действие, производимое спиралью, движение которой синхронизировано с вращением дежи, позволяет перемешать муку, воду, соль, дрожжи и иные возможные пищевые продукты, получив тесто желаемой густоты.
При необходимости, чтобы слегка изменить характеристики и/или густоту первоначального теста, вылить ингредиенты дежи через защитную решётку **F**.
По окончании рабочего цикла остановить машину, нажимая красную аварийную кнопку **D**, приподнять съёмное защитное приспособление до полного открытия, вынуть тесто из дежи.
В случае остановки функционирования тестомесильной машины по какой-либо причине, для повторного запуска подождать, по меньшей мере, 15 секунд.
Машина с приподнимающейся головной частью и съёмной дежой, несмотря на то, что с функциональной точки зрения идентична модели с фиксированной головной частью и дежей, отличается от последней возможностями, которые предоставляются в конце каждого рабочего цикла, а именно более легкой возможностью изъятия теста и большего удобства в фазе очистки.
Для поднятия головной части и извлечения дежи, действовать следующим образом: остановить машину, нажимая красную аварийную кнопку **D**; отсоединить вилку от розетки электропитания; полностью поднять съёмную защиту; натянуть штырь горизонтально, посредством ручки, расположенной с правой стороны машины, до разблокировки головной части; поднять головную часть при помощи нижнего поршня; повернуть по часовой стрелке диск, расположенный под дежей, а затем извлечь дежу для изъятия теста. После завершения очистки машины, вновь монтировать дежу, действуя в обратном порядке, и убедившись в том, что нижние штыри дежи вставлены соответствующим образом вовнутрь отверстий, расположенных на машине.

! Перед извлечением теста всегда выполнять порядок выключения.

ЗАЩИТНЫЕ УСТРОЙСТВА

Тестомесильная машина оснащена некоторыми защитными устройствами в целях защиты пользователя, а именно: съёмной защитной решёткой и контрольным устройством опускания решётки. Тестомесильные машины с поднимаемой головной частью и извлекаемой дежей также оснащены контрольным устройством опускания или поднятия головной части, штырем блокировки головой части в опущенном положении, контрольным устройством установки или извлечения дежи, и наконец, блокировочным диском дежи.

! Перед началом проведения рабочей фазы проверить по отдельности различные защитные устройства. Они являются эффективными, когда:

- поднимая решётку, машина останавливается;
- поднимая головную часть, машина останавливается или не запускается;
- извлекая дежу, машина останавливается или не запускается;
- умеренно потянув вверх как дежу, так и головную часть, они остаются заблокированы.

ФАЗА ВЫКЛЮЧЕНИЯ

Для выключения тестомесильной машины нажать красную аварийную кнопку **D** и повернуть ручку главного выключателя **A** в положение “**0**”.

4 ТЕХОБСЛУЖИВАНИЕ И ОЧИСТКА

МЕРЫ ПРЕДОСТОРОЖНОСТИ ДЛЯ ОБЕСПЕЧЕНИЯ БЕЗОПАСНОСТИ

! Перед осуществлением каких-либо операций техобслуживания, включая очистку, принять следующие меры предосторожности:

- убедиться, что главный выключатель выключен;
- убедиться, что питание не может быть случайно подключено. Отсоединить штепсельную вилку от розетки;
- использовать средства индивидуальной защиты, предусмотренные директивой 89/391/CEE;
- действовать всегда с соответствующим оборудованием для проведения техобслуживания;
- при завершении техобслуживания или ремонтных работ, перед повторным приведением тестомесильной машины в действие, вновь установить все защиты и активировать все защитные устройства.

ОЧЕРЕДНОЕ ТЕХОБСЛУЖИВАНИЕ, ВЫПОЛНЯЕМОЕ ПОЛЬЗОВАТЕЛЕМ

Тестомесильная машина нуждается в простой, но частой и тщательной очистке для возможности гарантии эффективной производительности и регулярного функционирования.

ОБЩАЯ ОЧИСТКА

Очистка должна проводиться после каждого использования машины, в соответствии с нормами гигиены и в целях обеспечения функциональности машины.
С помощью деревянной или пластмассовой лопатки удалить остатки теста, затем, с помощью мягкой губки и горячей воды аккуратно помыть дежу, спираль, тестомес и съёмное защитное приспособление. Насухо вытереть впитывающей бумагой для пищевых целей, после чего ещё раз протереть указанные выше поверхности, а затем всю машину чистой мягкой тряпкой, смоченной дезинфицирующим средством, специально используемом для кухонных машин.

! Настоятельно рекомендуется ни в коем случае не использовать химические средства непищевого характера, абразивные или коррозивные средства. Категорически запрещается использовать водные струи, разные принадлежности, шероховатые или абразивные средства, такие как мочалки из металлической стружки, губки и т.д., которые могут повредить поверхности и, в особенности, поставить под угрозу надёжность машины с точки зрения гигиены.

НАТЯЖЕНИЕ ВЕРХНЕЙ ЦЕПИ

Для поддержания как эффективности эксплуатационных характеристик, так и безопасности машины, необходимо периодически проверять натяжение верхней цепи. Цепь должна быть натянута, если при проведении проверок выяснится, что она чрезмерно ослаблена, или что вращение спирали неустойчивое.
Отвинтить винты и снять панель, расположенную сверху головной части тестомесильной машины. Ослабить на несколько оборотов винты, прикрепляющие опору спирали, и натянуть её до оптимизации натяжения цепи. Заблокировать опору спирали, завинчивая винты, и затем вновь монтировать и закрепить панель.

СМАЗКА ЦЕПЕЙ

Периодически выполнять смазку цепей, одна из которых расположена сверху внутри головной части, а другая внутри корпуса.
Отвинтить винты и снять панель, расположенную сверху головной части, а также панель, расположенную с задней стороны машины. Ввести вовнутрь цепей разумное количество соответствующей смазки и достаточное для гарантии смазки всех звеньев цепи. По окончании операции заново монтировать две панели и завинтить винты.

5 ВОЗМОЖНЫЕ НЕИСПРАВНОСТИ

Неисправность	Причина	Решение
Машина не включается	Отсутствует электроэнергия в сети	Проверить главный контактор, розетку, вилку и токоподводящий кабель
	Кнопка остановки/аварийная заблокирована	Повернуть кнопку в указанном стрелками направлении
	Защитная решётка и/или головная часть машины подняты	Надлежащим образом опустить как защитную решётку, так и головную часть машины.
	Ручка главного выключателя находится в положении “0”	Повернуть ручку в положение “1”
	Ручка таймера находится в положении “0”	Установить ручку на значение от 1 до 30 минут
Спираль вращается нестабильно	Цепь ослаблена	Натянуть цепь в соответствии с порядком, описанным в параграфе 7.2.2

6 ИНФОРМАЦИЯ В ОТНОШЕНИИ УНИЧТОЖЕНИЯ И УТИЛИЗАЦИИ

Уничтожение и утилизация машины находятся под исключительной ответственностью владельца, который должен действовать в соответствии с законами, действующими в собственной стране, в отношении безопасности, охраны и защиты окружающей среды.
Уничтожение и утилизация могут поручаться также и другим лицам, если они являются компаниями, авторизованными для удаления таких материалов.

☞ **УКАЗАНИЕ**: всегда придерживаться нормативов, действующих в стране, где осуществляется утилизация материалов, а также для заявления об утилизации.

! **ВНИМАНИЕ**: Все операции демонтажа в целях утилизации должны осуществляться при остановленной машине, с отключенным питанием:

- снять всё электрооборудование;
- отделить аккумуляторы, имеющиеся в электронных схемах;
- сдать структуру машины в металлолом через специализированные компании;

! **ВНИМАНИЕ**: Оставление машины в доступных зонах представляет серьёзную опасность для лиц и животных.
Ответственность за возможный ущерб персоналу и животным всегда несет владелец.

ИНФОРМАЦИЯ ДЛЯ ПОЛЬЗОВАТЕЛЕЙ

Оборудование входит в область применения европейских директив 2002/95/CE, 2002/96/CE, 2003/108/CE, которые предусматривают не осуществлять утилизацию данной продукции вместе с нормальными домашними отходами. Для предотвращения ущерба окружающей среде и здоровью людей, необходимо держать данную продукцию отдельно от других отходов, таким образом, чтобы можно было выполнить его безопасную переработку с точки зрения окружающей среды.

Для получения дополнительной информации о сборочных пунктах, свяжитесь с соответствующим отделом муниципалитета или продавцом, у которого была приобретена продукция.

ESPAÑOL

DECLARATIÓN CE DE CONFORMIDAD

De acuerdo con la Directiva de Baja Tensión 2014/35/UE, con la Directiva 2014/30/UE (Compatibilidad Electro-Magnética), con la directiva 2006/42 CE (máquinas); llevan el marcado CE.
De acuerdo con las reglas (CE) N. 1935/2004 del Parlamento Europeo y del Consejo del 27 de octubre de 2004 acerca de los materiales y objetos destinados a entrar en contacto con productos alimentarios.

Tipo de aparato	**IMPASTATRICE A SPIRALE**
Marca comercial	**PIZZA GROUP S. r. l.**
Modelo	**IF ÷ IR ÷ IFM ÷ IRM** **IF-VS ÷ IR-VS** **IF 2V ÷ IR 2V**
Fabricante	**PIZZA GROUP S. r. l.**
Dirección fabricante	**Via Carnia, 15** **33078, San Vito al Tagliamento (PN)** **Italia**
Teléfono	**+39.0434.857000**
Fax	**+39.0434.857001**

Las normas armonizadas o las especificaciones técnicas (designaciones) que se han aplicado de acuerdo con las reglas de las buenas prácticas en materia de seguridad en vigor en la CE, son:

Normas u otros documentos normativos

EN 60335-1 EN 60335-2-64

EN 292 EN 294 EN 418

EN 55014 EN 61000-3-2 EN 61000-3-3

Información adicional:

En calidad de fabricante y/o representante autorizado de la empresa en la CE, declaramos bajo nuestra propia responsabilidad que los aparatos son conformes a las exigencias esenciales previstas por las Directivas anteriormente mencionadas.

San Vito al Tagliamento (PN)

01.06.2016

Bellotto Carlo

Presidente

ÍNDICE

1 ADVERTENCIAS DE SEGURIDAD

ADVERTENCIAS PARA EL INSTALADOR

ADVERTENCIAS PARA EL USUARIO

ADVERTENCIAS PARA EL ENCARGADO DE MANTENIMIENTO

2 INSTALACIÓN

NIVELACIÓN DE LA AMASADORA

CONEXIÓN A LAS INSTALACIONES

CONEXIÓN ELÉCTRICA

PUESTA A TIERRA

3 PUESTA EN SERVICIO Y USO DE LA AMASADORA

DESCRIPCIÓN DEL PANEL DE MANDOS IF ÷ IR ÷ IFM ÷ IRM

FASE DE PUESTA EN MARCHA IF ÷ IR ÷ IFM ÷ IRM

DESCRIPCIÓN DEL PANEL DE MANDOS IF-VS ÷ IR-VS

FASE DE PUESTA EN MARCHA IF-VS ÷ IR-VS

DESCRIPCIÓN DEL PANEL DE MANDOS IF-2V ÷ IR-2V

FASE DE PUESTA EN MARCHA IF-2V ÷ IR-2V

FASE DE FUNCIONAMIENTO

DISPOSITIVOS DE SEGURIDAD

FASE DE APAGADO

4 MANTENIMIENTO Y LIMPIEZA

PRECAUCIONES DE SEGURIDAD

MANTENIMIENTO ORDINARIO DIRIGIDO AL USUARIO

LIMPIEZA GENERAL

TENSADO DE LA CADENA SUPERIOR

ENGRASE DE LAS CADENAS

5 POSIBLES ANOMALÍAS

6 INFORMACIÓN PARA EL DESGUACE Y LA ELIMINACIÓN

1 ADVERTENCIAS DE SEGURIDAD

ADVERTENCIAS PARA EL INSTALADOR

⚠
- Compruebe que las operaciones de preinstalación de la amasadora sean conformes a reglamentos locales, nacionales y europeos.
- Cumpla las prescripciones indicadas en este manual.
- No efectúe conexiones eléctricas temporales con cables provisionales o no aislados.
- Compruebe que la puesta a tierra de la instalación eléctrica sea eficiente.
- Use siempre el equipamiento de protección individual y los demás medios de protección previstos por la ley.

ADVERTENCIAS PARA EL USUARIO

⚠ El lugar en el que se va a instalar la máquina debe tener las siguientes características:
- estar seco;
- las fuentes de agua y de calor deben encontrarse a una distancia adecuada;
- la ventilación y la iluminación deben ser adecuadas y cumplir las normas higiénicas y de seguridad previstas por las leyes vigentes;
- el suelo debe ser llano y compacto para permitir una limpieza profunda;
- no se deben colocar cerca de la máquina obstáculos de ninguna clase que pudieran condicionar su ventilación normal.

Además, el usuario debe:
- asegurarse de que los niños no se acerquen a la máquina en funcionamiento;
- cumplir las prescripciones contenidas en este manual;
- no extraer ni manipular los dispositivos de seguridad de la máquina;
- prestar siempre la máxima atención, es decir, observar su propio trabajo y no utilizar la máquina mientras esté distraído;
- efectuar todas las operaciones con la máxima seguridad y calma;
- cumplir las instrucciones y las advertencias contenidas en las placas colocadas en la amasadora.

Las placas son dispositivos de prevención de accidentes, por lo que deben resultar siempre perfectamente legibles. Si estuviesen dañadas y fuesen ilegibles, es obligatorio sustituirlas, solicitando el recambio original al Fabricante.
- Desconectar la alimentación eléctrica después de cada uso y antes de las operaciones de limpieza, mantenimiento o desplazamiento de la máquina.

ADVERTENCIAS PARA EL ENCARGADO DE MANTENIMIENTO

⚠
- Cumpla las prescripciones contenidas en este manual.
- Use siempre el equipamiento de protección individual y los demás medios de protección.
- Antes de comenzar cualquier operación de mantenimiento, asegúrese de que la amasadora se haya enfriado (motor eléctrico), si se ha utilizado.
- Si incluso uno solo de los dispositivos de seguridad estuviese descalibrado o no funcionase, debe considerarse que la amasadora está fuera de servicio.
- Desconecte la alimentación eléctrica antes de intervenir en partes eléctricas, electrónicas y conectores.

2 INSTALACIÓN

La instalación debe ser efectuada por personal cualificado conforme a los reglamentos locales, nacionales y europeos.

NIVELACIÓN DE LA AMASADORA

En caso de inestabilidad de la amasadora debida a irregularidades del suelo, calce las patas o las ruedas con pedazos de plancha de goma.

CONEXIÓN A LAS INSTALACIONES

Conexión eléctrica
Basta conectar el cable de alimentación a la red eléctrica.
La toma de la red eléctrica debe ser de fácil acceso y no debe requerir ningún desplazamiento de la máquina.

☞ **La conexión eléctrica (clavija) debe ser de fácil acceso incluso tras la instalación de la amasadora**.
La distancia entre la máquina y la toma de corriente debe ser suficiente para evitar que se tense el cable de alimentación. Además, el cable no debe estar bajo las patas o ruedas de apoyo de la máquina.

! **Si el cable de alimentación sufriese daños, deberá ser sustituido por el servicio de asistencia técnica o por un técnico cualificado, para evitar cualquier riesgo**.

PUESTA A TIERRA

PELIGRO
⚠ **Es obligatorio que la instalación cuente con una puesta a tierra y un interruptor diferencial conforme a las leyes vigentes.**

3 PUESTA EN SERVICIO Y USO DE LA AMASADORA

DESCRIPCIÓN DEL PANEL DE MANDOS IF ÷ IR ÷ IFM ÷ IRM

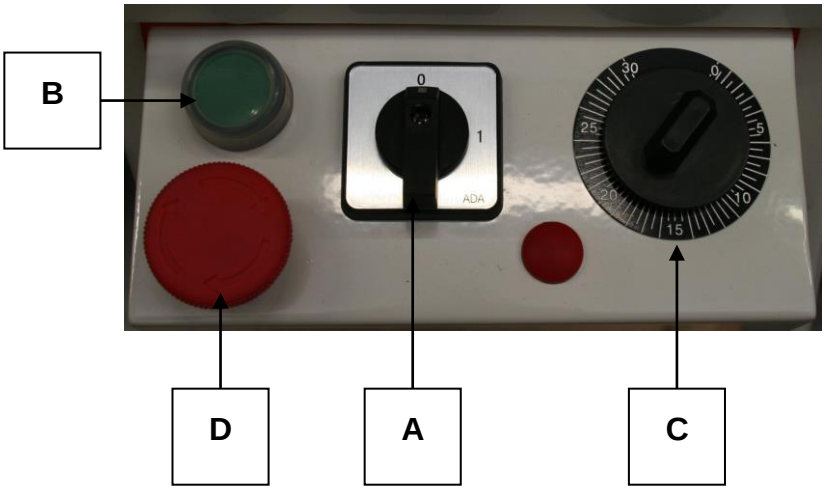

El panel consta de un interruptor general (**A**), un botón verde de puesta en marcha (**B**), un temporizador (**C**), un botón rojo de parada de emergencia (**D**).
El panel permite encender y apagar la amasadora, regular su funcionamiento y configurarla.

Leyenda:

A = Interruptor general (en las versiones 2V permite también seleccionar la velocidad)
B = Botón verde de puesta en marcha
C = Temporizador
D = Botón rojo de emergencia / Parada

FASE DE PUESTA EN MARCHA IF ÷ IR ÷ IFM ÷ IRM

Conecte la amasadora a la red eléctrica y gire el interruptor general **A** hasta la posición "**1**". En las versiones 2V gire el Interruptor hasta la posición "**1**" o "**2**" según la velocidad deseada.
Gire el mando del temporizador **C** hasta el tiempo deseado, entre 0 y 30 min.
Pulse el botón verde **B** para poner en marcha la cuba y la espiral.

DESCRIPCIÓN DEL PANEL DE MANDOS IF-VS ÷ IR-VS

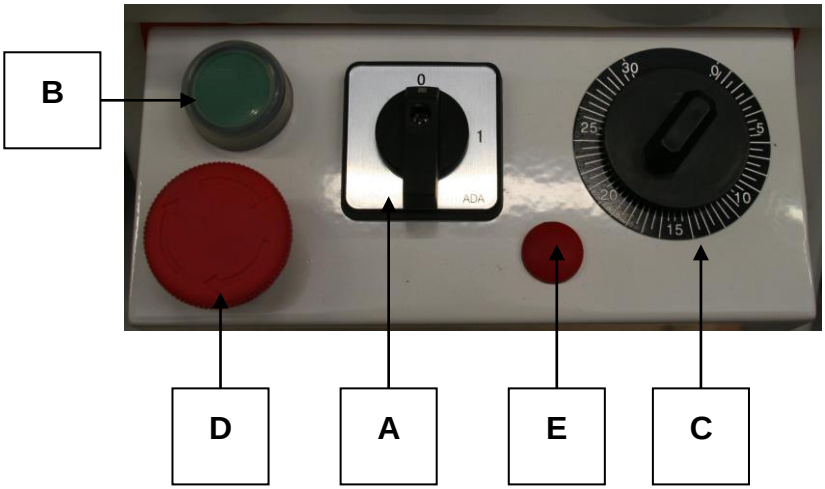

El panel consta de un interruptor general (**A**), un botón verde de puesta en marcha (**B**), un temporizador (**C**), un botón rojo de parada de emergencia (**D**) y un mando para la regulación de la velocidad (**E**).
El panel permite encender y apagar la amasadora, regular su funcionamiento y configurarla.

Leyenda:

A = Interruptor general
B = Botón verde de puesta en marcha
C = Temporizador
D = Botón rojo de emergencia / Parada
E = Regulador de velocidad

DESCRIPCIÓN DEL PANEL DE MANDOS IF-2V ÷ IR-2V

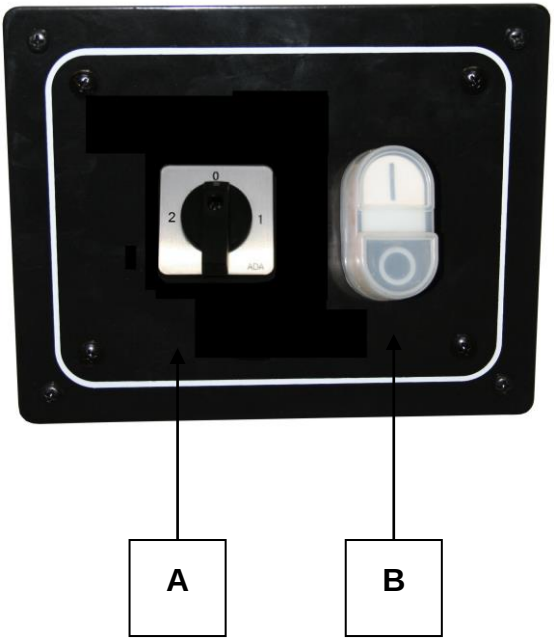

El panel está compuesto por un selector (A) a la segunda velocidad y de un botón 0-1 (B)

El panel permite la conexión y desconexión de la mesa de mezclas, que regula el funcionamiento y permite el ajuste.

Leyenda:

A = Selector 1-0-2
B = START - PARADA

FASE DE PUESTA EN MARCHA IF-2V ÷ IR-2V

Conecte el mezclador a la fuente de alimentación y encienda el interruptor selector a la posición "1" o "2" en función de la velocidad deseada.
Pulse la tecla "1" en el botón B para iniciar una bañera y una espiral.
Pulse la tecla "1" en el botón B para detener la máquina.

FASE DE PUESTA EN MARCHA IF-VS ÷ IR-VS

Conecte la amasadora a la red eléctrica y gire el interruptor general **A** hasta la posición "**1**".
Gire el mando del temporizador **C** hasta el tiempo deseado, entre 0 y 30 min.
Pulse el botón verde **B** para poner en marcha la cuba y la espiral.
Gire el mando del regulador de velocidad **E** para aumentar o reducir la velocidad de rotación de la cuba y de la espiral.

FASE DE FUNCIONAMIENTO

Antes de comenzar cada ciclo de funcionamiento, asegúrese de que la máquina esté perfectamente limpia, especialmente las superficies de la cuba, de la espiral y de la barra para romper la masa, que entran en contacto con los productos alimentarios .

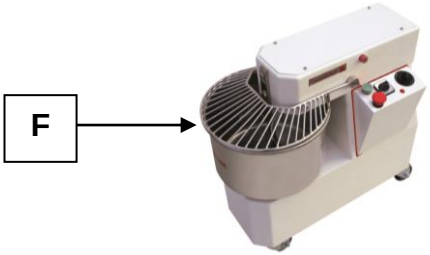

Tras levantar la protección **F**, vierta dentro de la cuba los ingredientes en la cantidad deseada. Baje la protección **F**, seleccione un tiempo determinado con el temporizador **C** y pulse el botón verde de puesta en marcha **B**.
La acción efectuada por la espiral, cuyo movimiento está sincronizado con la rotación de la cuba, permite obtener la amalgamación de harina, agua, sal, levadura y otros posibles productos alimentarios hasta obtener la consistencia de la masa deseada.
En caso necesario, para modificar ligeramente las características y/o la consistencia de la masa inicial, vierta los ingredientes de la cuba a través de la rejilla de protección **F**.
Una vez completado el ciclo de elaboración, detenga la máquina pulsando el botón rojo de emergencia **D**, levante la protección móvil hasta la máxima apertura, extraiga la masa de la cuba y limpie la máquina.
Si se interrumpiese el funcionamiento de la amasadora por cualquier motivo, espere al menos 15 segundos antes de volver a poner en marcha la máquina.
La máquina con cabeza elevable y cuba extraíble, aun siendo funcionalmente idéntica a la versión con cabeza y cuba fijas, se distingue de esta última por las posibilidades ofrecidas al final de cada ciclo de funcionamiento, es decir, una mayor facilidad para extraer la masa y una mayor comodidad en la fase de limpieza.
Para levantar la cabeza y extraer la cuba, siga estos pasos: detenga la máquina pulsando el botón rojo de emergencia **D**; desconecte la clavija de la toma de alimentación eléctrica; levante completamente la protección móvil; tire en horizontal del pasador, mediante el mando situado en el lado derecho de la máquina, hasta desbloquear la cabeza; levante la cabeza con ayuda del pistón situado debajo; gire en el sentido de las agujas del reloj el disco situado bajo la cuba y por último extraiga la cuba para sacar la pasta. Tras completar la limpieza de la máquina, vuelva a montar la cuba siguiendo los pasos anteriores en orden inverso, asegurándose de que los pasadores situados bajo la cuba estén introducidos correctamente en los orificios de la máquina.

DISPOSITIVOS DE SEGURIDAD

La amasadora incluye algunos dispositivos de seguridad para la protección del usuario: una rejilla de protección móvil y un dispositivo que comprueba si la rejilla está bajada. Las amasadoras con cabeza elevable y cuba extraíble incluyen también un dispositivo que comprueba si la cabeza está bajada o levantada, un pasador de bloqueo de la cabeza en posición bajada, un dispositivo que comprueba si la cuba está introducida o extraída, y un disco de bloqueo de la cuba.

! Antes de comenzar la fase de funcionamiento, compruebe cada uno de los dispositivos de seguridad. Estos serán eficientes si:

- al levantar la rejilla la máquina se detiene;
- al levantar la cabeza, la máquina se detiene o no se pone en marcha;
- al extraer la cuba, la máquina se detiene o no se pone en marcha;
- al tirar moderadamente hacia arriba de la cuba y de la cabeza, estas permanecen bloqueadas.

FASE DE APAGADO

Para apagar la amasadora, pulse el botón rojo de emergencia **D** y gire el mando del interruptor general **A** hasta la posición "**0**".

4 MANTENIMIENTO Y LIMPIEZA

PRECAUCIONES DE SEGURIDAD

! Antes de efectuar cualquier operación de mantenimiento, incluida la limpieza, adopte las siguientes precauciones:

asegúrese de que el interruptor general no esté accionado;
asegúrese de que no se pueda reactivar la alimentación por accidente. Desconecte la clavija de la toma de alimentación eléctrica;
utilice el equipamiento de protección individual previsto por la directiva 89/391/CEE;
trabaje siempre con un equipamiento adecuado para el mantenimiento;
una vez concluido el mantenimiento o las operaciones de reparación, antes de volver a poner en servicio la amasadora, vuelva a instalar todas las protecciones y a activar todos los dispositivos de seguridad.

MANTENIMIENTO ORDINARIO DIRIGIDO AL USUARIO

La amasadora requiere una limpieza sencilla pero frecuente y cuidadosa para poder garantizar siempre un rendimiento eficiente y un funcionamiento correcto.

LIMPIEZA GENERAL

La limpieza debe realizarse después de cada uso, cumpliendo las normas de higiene, para preservar el funcionamiento de la máquina.
Con la ayuda de una espátula de madera o plástico, efectúe una eliminación preliminar de los restos de masa y después limpie en profundidad la cuba, la espiral, la barra para romper la masa y la protección móvil, utilizando una esponja blanda y agua caliente. Seque con papel absorbente de uso alimentario; a continuación, repase primero las superficies antes mencionadas, y después toda la máquina, con un paño suave y limpio empapado en desinfectante específico para máquinas alimentarias.

! No se deben usar en ningún caso productos químicos no alimentarios, abrasivos o corrosivos. Evite absolutamente el uso de chorros de agua, herramientas varias, instrumentos ásperos o abrasivos como estropajos de acero, esponjas o demás, que puedan dañar las superficies, y especialmente comprometer la seguridad desde un punto de vista higiénico.

TENSADO DE LA CADENA SUPERIOR

Para mantener la eficiencia del rendimiento y la seguridad de la máquina, es indispensable comprobar periódicamente la tensión de la cadena superior. Esta debe tensarse si durante la comprobación se percibe un aflojamiento excesivo o si la rotación de la espiral es irregular.
Desenrosque los tornillos y desmonte el panel situado sobre la cabeza de la amasadora. Afloje algunas vueltas los tornillos que fijan el soporte de la espiral y tire de este hasta optimizar el tensado de la cadena. Fije el soporte de la espiral volviendo a enroscar los tornillos y por último vuelva a montar y a fijar el panel.

ENGRASE DE LAS CADENAS

Engrase periódicamente las cadenas. Una de ellas está colocada en la parte superior del interior de la cabeza, y la otra en el interior de la carcasa.
Desenrosque los tornillos y desmonte el panel situado sobre la cabeza y el panel situado en la parte posterior de la máquina. Aplique en el interior de las cadenas una cantidad razonable de grasa adecuada, suficiente para garantizar la lubricación de todos los eslabones de la cadena. Una vez completada la operación, vuelva a montar los dos paneles y a enroscar los tornillos.

5 POSIBLES ANOMALÍAS

Anomalía	Causa	Solución
La máquina no arranca	Falta de energía eléctrica en la red	Compruebe el contactor general, la toma, la clavija y el cable de alimentación
	El botón de parada/emergencia está bloqueado	Gire el botón en el sentido indicado por las flechas
	La rejilla de protección y/o la cabeza están levantadas	Baje correctamente tanto la rejilla de protección como la cabeza
	El mando del interruptor general está en la posición “0”	Gire el mando hasta la posición “1”
	El mando del temporizador está en la posición “0”	Ponga el mando entre 1 y 30 minutos
La espiral gira de manera irregular	La cadena está floja	Tense la cadena de la manera descrita en el apartado 7.2.2

6 INFORMACIÓN PARA EL DESGUACE Y LA ELIMINACIÓN

El desguace y la eliminación de la máquina son responsabilidad exclusiva del propietario y corren a cargo de este, que deberá cumplir las leyes vigentes en su país en materia de seguridad, respeto y protección del medio ambiente.
El desguace y la eliminación pueden ser encargados también a terceros, siempre y cuando se recurra a empresas autorizadas para la recogida y la eliminación de los materiales en cuestión.

☞ **INDICACIÓN**: cíñase en todo caso a las normativas vigentes en el país de uso para la eliminación de los materiales o para la notificación de la eliminación en caso necesario.

! **ATENCIÓN**: todas las operaciones de desmontaje para el desguace deben realizarse con la máquina parada y desprovista de alimentación eléctrica.
- extraiga todo el aparato eléctrico;
- separe los acumuladores presentes en las tarjetas electrónicas;
- efectúe el desguace de la máquina a través de empresas autorizadas;

! **ATENCIÓN**: el abandono de la máquina en zonas accesibles constituye un grave peligro para personas y animales.
La responsabilidad por posibles daños a personas y animales recae siempre en el propietario.

INFORMACIÓN PARA EL USUARIO

El aparato está incluido en el campo de aplicación de las directivas europeas 2002/95/CE, 2002/96/CE y 2003/108/CE, que prohíben la eliminación conjunta de este producto con los residuos domésticos normales. Para evitar posibles daños al medio ambiente o a la salud de las personas, se ruega mantener este producto separado de los demás desechos para poder reciclarlo de manera segura desde el punto de vista medioambiental.

Para más información acerca de los centros de recogida, póngase en contacto con la oficina municipal o el distribuidor al que se ha comprado el producto.

DEUTSCH

KONFORMITÄT CE ERKLÄRUNG

Entspricht der Niederspannungsrichtlinie **2014/35/UE**, der Richtlinie **2014/30/UE** (Elektromagnetische Verträglichkeit), der Richtlinie **2006/42 EWG** (Maschinen), ergänzt durch die CE-Kennzeichnung.

Entspricht der Bestimmung (EG) Nr. **1935/2004** des Europäischen Parlaments und der Versammlung vom **27. Oktober 2004** zu Materialen und Gegenständen, die zum Kontakt mit Lebensmitteln bestimmt sind.

Art des Geräts	**TEIGKNETMASCHINE**
Handelsmarke	**PIZZA GROUP S. r. l.**
Modell	**IF ÷ IR ÷ IFM ÷ IRM** **IF-VS ÷ IR-VS** **IF 2V ÷ IR 2V**
Hersteller	**PIZZA GROUP S. r. l.**
Adresse hersteller	**Via Carnia, 15** **33078, San Vito al Tagliamento (PN)** **Italia**
Telefon	**+39.0434.857000**
Fax	**+39.0434.857001**

Die harmonisierten Normen oder technischen Beschreibungen (Bezeichnungen), die in Übereinstimmung mit den sachbezogenen, geltenden Sicherheitsvorschriften innerhalb der EWG angewandt werden, sind die folgenden:

Normen oder andere Dokumente zu Normen
EN 60335-1 EN 60335-2-64

EN 292 EN 294 EN 418

EN 55014 EN 61000-3-2 EN 61000-3-3

Weitere Informationen:
Als Hersteller und/oder ermächtigter Vertreter der Gesellschaft innerhalb der EWG wird auf eigene Verantwortung erklärt, dass die Geräte den wesentlichen Anforderungen, die von den oben genannten Richtlinien vorgesehen sind, entsprechen.

San Vito al Tagliamento (PN)
01.06.2016

Bellotto Carlo
Präsident

INHALT

1 SICHERHEITSHINWEISE

HINWEISE FÜR DEN INSTALLATEUR

HINWEISE FÜR DEN BENUTZER

HINWEISE FÜR DEN WARTUNGSTECHNIKER

2 INSTALLATION

NIVELLIERUNG DER TEIGKNETMASCHINE

ANLAGENANSCHLUSS

ELEKTRISCHER ANSCHLUSS

ERDUNG

3 INBETRIEBNAHME UND GEBRAUCH DER TEIGKNETMASCHINE

BESCHREIBUNG DES BEDIENFELDES IF ÷ IR ÷ IFM ÷ IRM

STARTPHASE IF ÷ IR ÷ IFM ÷ IRM

BESCHREIBUNG DES BEDIENFELDES IF-VS ÷ IR-VS

STARTPHASE IF-VS ÷ IR-VS

BESCHREIBUNG DES BEDIENFELDES IF-2V ÷ IR-2V

STARTPHASE IF-2V ÷ IR-2V

ARBEITSPHASE

SICHERHEITSVORRICHTUNGEN

AUSSCHALTPHASE

4 WARTUNG UND REINIGUNG

SICHERHEITSMASSNAHMEN

NORMALE WARTUNG DURCH DEN BENUTZER

ALLGEMEINE REINIGUNG

SPANNUNG DER OBEREN KETTE

EINFETTEN DER KETTEN

5 MÖGLICHE ANOMALIEN

6 HINWEISE ZU VERSCHROTTUNG UND ENTSORGUNG

1 SICHERHEITSHINWEISE

HINWEISE FÜR DEN INSTALLTEUR

⚠
- Prüfen, ob die Vorbereitungen für die Aufnahme der Teigknetmaschine den örtlichen, nationalen und europäischen Bestimmungen entsprechen.
- Den Vorschriften dieses Handbuches genau folgen.
- Keine losen Anschlüsse mit provisorischen und nicht isolierten Kabeln vornehmen.
- Prüfen, ob die Erdung der elektrischen Anlage ausreicht.
- Immer persönliche Schutzvorrichtungen und andere gesetzlich vorgeschriebene Schutzmittel benutzen.

HINWEISE FÜR DEN BENUTZER

⚠ Die Raumbedingungen des Aufstellungsortes der Maschine müssen folgende Merkmale aufweisen:
- trocken sein;
- Wasser- und Wärmequellen müssen ausreichend entfernt sein;
- Belüftung und Beleuchtung müssen angemessen sein und den Hygiene- und Sicherheitsvorschriften der geltenden Gesetze entsprechen;
- der Fußboden muss eben und kompakt sein, um eine gründliche Reinigung zu erleichtern;
- in unmittelbarer Nähe der Maschine dürfen sich keine, wie auch immer gearteten Hindernisse befinden, die die normale Belüftung derselben beeinträchtigen könnten.

Außerdem muss der Benutzer:
- darauf achten, dass sich keine Kinder der arbeitenden Maschine nähern;
- den Vorschriften dieses Handbuches genau folgen.
- Er darf die Sicherheitsvorkehrungen an der Maschine nicht entfernen oder verändern;
- immer mit größter Aufmerksamkeit arbeiten, d.h. er muss seine Arbeit genau beobachten und darf während der Benutzung der Maschine nicht abgelenkt sein.
- alle Arbeiten mit absoluter Sicherheit und großer Ruhe ausführen.
- die Anweisungen und Hinweise auf den Schildern der Teigknetmaschine beachten.

Die Warnschilder dienen der Unfallverhütung und müssen daher immer gut zu lesen sein. Sobald sie Beschädigt oder nicht mehr lesbar sind, müssen sie ausgetauscht werden, vom Hersteller ein Originalersatzteil verlangen.
- Nach jedem Gebrauch und vor jeder Reinigung, Wartung oder Verlagerung der Maschine muss sie von der Stromversorgung abgetrennt werden.

HINWEISE FÜR DEN WARTUNGSTECHNIKER

⚠
- Die Vorschriften dieses Handbuchs beachten.
- Immer die persönlichen Schutzvorrichtungen und andere schützende Mittel benutzen.
- Vor jeder Wartungsarbeit sicher stellen, dass die Teigknetmaschine, wenn sie benutzt wurde, abgekühlt ist (Elektromotor).
- Die Teigknetmaschine ist als funktionsuntüchtig anzusehen, wenn auch nur eine der Sicherheitsvorkehrungen verstellt oder betriebsunfähig sein sollte.
- Vor einem Eingriff an elektrischen und elektronischen Teilen oder Leitern, die Stromversorgung abtrennen.

2 INSTALLATION

Alle Installationsarbeiten müssen unter Beachtung der örtlichen, nationalen und europäische gültigen Vorschriften durch qualifiziertes Personal erfolgen.

NIVELLIERUNG DER TEIGKNETMASCHINE

Bei einem unebenen Fußboden müssen die Füße oder Rollen für einen festen Stand der Teigknetmaschine mit geeigneten Gummiunterlagen unterlegt werden.

ANLAGENANSCHLUSS

Elektrischer Anschluss

Der elektrische Anschluß muß unter Beachtung der jeweils gültigen Vorschriften von einem qualifizierten und berechtigten Unternehmen durchgeführt werden.
Je nach Modell der Teigknetmmaschine erfolgt der Anschluß des Anschlusskabels an ein 230Volt 1N~ oder an 400Volt 3P~ Netz.
Die Netzsteckdose muss immer leicht erreichbar sein, und darf nicht verstellt sein.

☞ **Die drehzahlgeregelten 230 Volt Maschinen sind mit einem modernen Frequenzumrichter (Inverter) ausgestattet. Um Fehlauslösungen Ihres Fehler-stromschutzschalters (FI) zu vermeiden benötigen Sie bauseitig einen umrichterfesten FI-Fehler-stromschutzschalter. (Diesen umrichterfesten FI-Fehlerstromschutz-schalter erhalten Sie bei Bedarf von Ihrem Installationselektriker).**

☞ Der Stromanschlußstecker muss auch nach der Installation der Teigknetmaschine immer leicht erreichbar sein. Das Anschlusskabel darf nicht gespannt oder unter Stellfüßen oder Rollen eingezwickt werden.

! **Um jeder Gefahr vorzubeugen, muss ein beschädigtes Anschlusskabel sofort vom technischen Kundendienst oder von einem qualifizierten Techniker ausgetauscht werden**.

ERDUNG

GEFAHR

⚠ **Die Anlage muss eine vorschriftsmäßige Erdung und einen umrichtfesten FI-Fehler-stromschutzschalter gemäß den geltenden gesetzlichen Bestimmungen aufweisen**.

3 INBETRIEBNAHME UND GEBRAUCH DER TEIGKNETMASCHINE

BESCHREIBUNG DES BEDIENFELDES IF ÷ IR ÷ IFM ÷ IRM

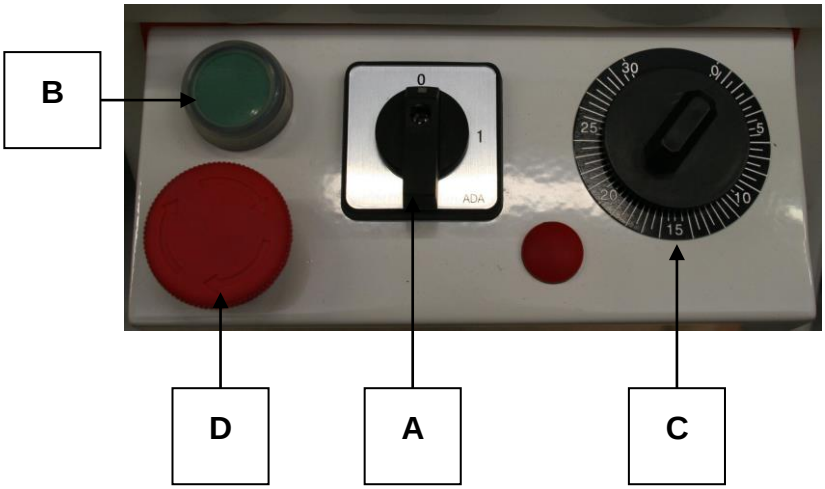

Das Bedienfeld besteht aus einem Hauptschalter (**A**), einer grünen Starttaste (**B**), einem Timer (**C**), einer roten Not-Aus-Taste (**D**).

Das Bedienfeld erlaubt die Ein- und Ausschaltung der Teigknetmaschine, regelt ihren Betrieb und ermöglicht die Einstellung.

Legende:

A = Hauptschalter (in den Ausführungen 2V kann auch die Geschwindigkeit gewählt werden)
B = Grüne Starttaste
C = Timer
D = Rote Alarmtaste / Stop

STARTPHASE IF ÷ IR ÷ IFM ÷ IRM

Die Teigknetmaschine an das Stromnetz anschließen und den Hauptschalter **A** auf "**1**" stellen. In den Ausführungen 2V den Schalter je nach gewünschter Geschwindigkeit auf "**1"** oder "**2"** stellen.
Den Drehknopf des Timers **C** auf die gewünschte Zeit von 0 bis 30 min. stellen.
Die grüne Taste **B** drücken, um den Kessel und die Knetspirale zu starten.

BESCHREIBUNG DES BEDIENFELDES IF-VS ÷ IR-VS

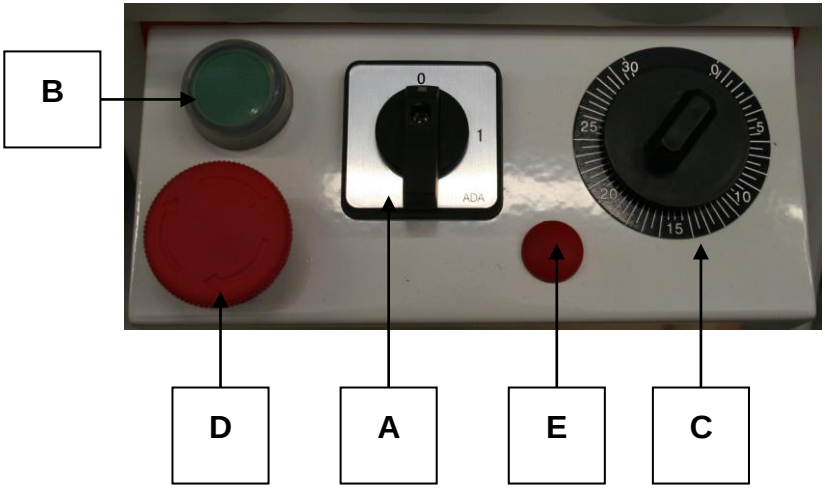

Das Bedienfeld besteht aus einem Hauptschalter (**A**), einer grünen Starttaste (**B**), einem Timer (**C**), einer roten Not-Aus-Taste (**D**) und einem Drehknopf für die Änderung der Geschwindigkeit (**E**).

Das Bedienfeld erlaubt die Ein- und Ausschaltung der Teigknetmaschine, regelt ihren Betrieb und ermöglicht die Einstellung.

Legende:

A = Hauptschalter
B = Grüne Starttaste
C = Timer
D = Rote Alarmtaste / Stop
E = Geschwindigkeitsregler

STARTPHASE IF-VS ÷ IR-VS

Die Teigknetmaschine an das Stromnetz anschließen und den Hauptschalter **A** auf "**1**" stellen.
Den Drehknopf des Timers **C** auf die gewünschte Zeit von 0 bis 30 min. stellen.
Die grüne Taste **B** drücken, um den Kessel und die Knetspirale zu starten.
Den Drehknopf des Geschwindigkeitsreglers **E** drehen, um die Drehgeschwindigkeit des Kessels und der Knetspirale zu steigern oder herabzusetzen.

BESCHREIBUNG DES BEDIENFELDES IF-2V ÷ IR-2V

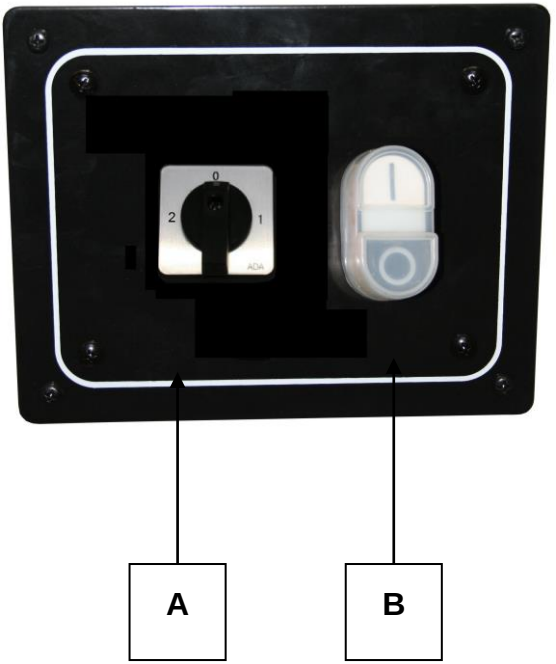

Die Platte wird durch einen Wähler (A) zum zweiten Gang und einen Knopf 0-1 (B) aus

Die Platte ermöglicht das Ein- und Ausschalten des Mischers, regelt den Betrieb und ermöglicht die Einstellung.

Legende:

A = Selektor 1-0-2
B = Start - Stop

STARTPHASE IF-2V ÷ IR-2V

Schließen Sie das Mischpult an die Stromversorgung und schalten Sie den Wahlschalter auf Position "1" oder "2" in Abhängigkeit von der gewünschten Geschwindigkeit.
Drücken Sie "1" auf der B-Taste sowohl eine Badewanne und eine Spirale einzuleiten.
Drücken Sie "1" auf der B-Taste die Maschine zu stoppen.

ARBEITSPHASE

Sich vor jedem Arbeitszyklus vergewissern, dass die Maschine vollkommen sauber ist, dies betrifft vor allem die Kesseloberfläche, die Knetspirale und den Teigteiler, die mit den Lebensmitteln in Berührung kommen.
Nach Hochheben der Schutzabdeckung **F**, die Zutaten in der gewünschten Menge in den Kessel geben Die Schutzabdeckung **F** wieder senken, den Timer **C** auf die festgelegte Zeit einstellen und die grüne Starttaste **B** drücken.

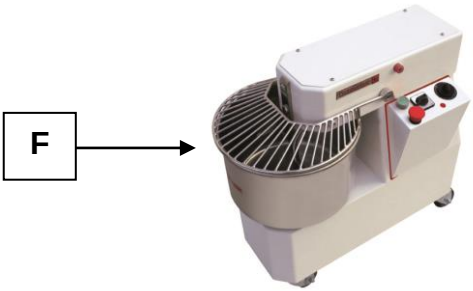

Die Bewegung der Knetspirale, die auf die Kesseldrehung abgestimmt ist, vermengt Mehl, Wasser, Salz, Backpulver und andere Teigzutaten bis die gewünschte Konsistenz des Teiges erreicht ist.
Falls man die Merkmale und/oder die Konsistenz der Ausgangsform des Teiges leicht verändern möchte, kann man die Zutaten für den Kessels über das Schutzgitter **F** einschütten.
Nach Ablauf des Arbeitszyklus die Maschine mit der roten Not-Aus-Taste **D** anhalten, die bewegliche Schutzabdeckung vollständig hochheben, Nehmen Sie den Teig aus dem Tank und reinigen Sie die Maschine.
Falls der Betrieb der Teigknetmaschine aus welchem Grund auch immer unterbrochen wird, vor dem Neustart mindestens 15 Sekunden warten.
Die Maschine mit aufklappbarem Kopf und herausziehbarem Kessel ist zwar von der Funktionsweise her mit der Version mit festem Kopf und Kessel identisch, unterscheidet sich jedoch von der letzteren durch die angebotenen Möglichkeiten am Zyklusende, das heißt eine einfachere Herausnahme des Teiges und eine leichtere Reinigung.
Zum Aufklappen des Kopfes und Herausziehen des Kessels wie folgt vorgehen: die Maschine durch Drücken der roten Not-Aus-Taste **D** anhalten; den Stecker aus der Stromsteckdose herausziehen; die bewegliche Schutzabdeckung ganz hochheben; mit dem Drehknopf auf der rechten Seite der Maschine den Zapfen horizontal herausziehen bis der Kopf freigegeben wird; den Kopf mit Hilfe des darunter befindlichen Kolbens aufklappen; die Scheibe unter dem Kessel im Uhrzeigersinn drehen und den Kessel für die Teigentnahme herausziehen. Nach der Reinigung der Maschine den Kessel in umgekehrter Reihenfolge wieder montieren, sich vergewissern, dass die Zapfen unter dem Kessel richtig in den Öffnungen der Maschine stecken.

AUSSCHALTPHASE

Die Teigknetmaschine ist mit einigen Sicherheitsvorkehrungen zum Schutz des Benutzers ausgestattet, es handelt sich um ein bewegliches Schutzgitter sowie eine Vorrichtung, die prüft, ob das Gitter gesenkt ist. Die Teigknetmaschinen mit aufklappbarem Kopf und herausziehbarem Kessel verfügen über eine Vorrichtung, die feststellt, ob der Kopf gesenkt oder aufgeklappt ist, einen Feststellzapfen für den Kopf in gesenkter Stellung, eine Prüfvorrichtung des eingeschobenen oder herausgezogenen Kessels sowie eine Feststellscheibe des Kessels.
! Vor Beginn der Arbeitsphase die verschiedenen Sicherheitsvorrichtungen einzeln überprüfen. Sie sind effizient wenn:

- die Maschine bei Aufklappen des Gitters anhält;
- die Maschine bei Aufklappen des Kopfes anhält und nicht startet;
- die Maschine bei Herausziehen des Kessels anhält und nicht startet;
- durch leichtes Ziehen nach oben, sowohl der Kessel als auch der Kopf blockiert werden.

AUSSCHALTPHASE

Zum Ausschalten der Teigknetmaschine die rote Not-Aus-Taste **D** drücken und den Drehknopf des Hauptschalters **A** auf "**0**" stellen.

4 WARTUNG UND REINIGUNG

SICHERHEITSMASSNAHMEN

! Vor jedem Wartungseingriff einschließlich Reinigung, folgende Vorsichtsmaßnahmen ergreifen:
- sicherstellen, dass der Hauptschalter ausgeschaltet ist;
- sicherstellen, dass die Versorgung nicht versehentlich wieder eingeschaltet werden kann. Den Stecker aus der Stromsteckdose herausziehen;
- die von der Richtlinie 89/391/EWG vorgesehenen individuellen Schutzvorrichtungen benutzen;
- immer mit für die Wartung geeigneten Werkzeigen arbeiten;
- nach der Wartung oder den Reparaturarbeiten müssen vor der Inbetriebnahme der Teigknetmaschine erst wieder alle Schutzvorkehrungen montiert und die Sicherheitsvorrichtungen aktiviert werden.

NORMALE WARTUNG DURCH DEN BENUTZER

Die Teigknetmaschine benötigt eine einfache, aber häufige und gründliche Reinigung, damit immer eine effiziente Leistung und ein ordnungsgemäßer Betrieb gewährleistet ist.

ALLGEMEINE REINIGUNG

Die Reinigung muss nach jedem Gebrauch unter Beachtung der Hygienevorschriften und zum Schutz der Funktionstüchtigkeit der Maschine durchgeführt werden.
Mit einer Holz-oder Kunststoffspachtel die Teigreste grob entfernen und anschließend den Kessel, die Knetspirale, den Teigteiler und die bewegliche Schutzabdeckung mit einem weichem Schwamm und warmem Wasser gründlich reinigen. Mit saugfähigem Küchenpapier trocknen, danach mit einem weichen und sauberen Tuch, das mit einem speziellen Desinfektionsmittel für Maschinen zur Nahrungsmittelherstellung getränkt wurde, erst über die oben genannten Oberflächen wischen und anschließend die ganze Maschine damit behandeln.

! Es dürfen auf keinen Fall chemische, für Lebensmittel ungeeignete, scheuernde oder korrosive Produkte benutzt werden. Wasserstrahle, Werkzeuge, raue oder scheuernde Reinigungsmittel, wie Stahlkissen, Schwämme oder ähnliches, die die Oberflächen beschädigen können und damit die Sicherheit aus hygienischer Sicht beeinträchtigen, sind absolut zu meiden.

SPANNUNG DER OBEREN KETTE

Die regelmäßige Überprüfung der Spannung der oberen Kette ist für die Effizienz der Leistungen und die Maschinensicherheit unentbehrlich. Wenn man bei der Überprüfung ein übermäßiges Lockern der Kette oder eine ungleichmäßige Drehung der Knetspirale bemerkt, muss die Kette nachgespannt werden.
Die Schrauben herausdrehen und die Platte über dem Kopf der Teigknetmaschine abnehmen. Die Schrauben, mit denen die Halterung der Knetspirale befestigt ist, um einige Umdrehungen lockern, an der Halterung ziehen, um die Kettenspannung zu optimieren. Die Halterung der Knetspirale durch eindrehen der Schrauben wieder blockieren und zum Schluss die Platte wieder montieren und befestigen.

EINFETTEN DER KETTEN

Die Ketten müssen regelmäßig eingefettet werden, eine befindet sich oben im Innern des Kopfes, die andere im Gehäuse.
Die Schrauben herausdrehen und die Platte über dem Kopf und die Platte hinter der Maschine entfernen. Eine ordentliche Menge geeigneten Schmierfetts in die Ketten geben, es muss für die Schmierung aller Kettenglieder ausreichen. Nach diesem Vorgang die zwei Platten wieder montieren und die Schrauben eindrehen.

5 MÖGLICHE ANOMALIEN

Störung	Ursache	Lösung
Die Maschine schaltet sich nicht ein	Keine Stromversorgung	Den Hauptschaltschütz, die Steckdose, den Stecker und das Versorgungskabel prüfen
	Die Stopp-/Not-Aus-Taste ist blockiert	Die Taste in Pfeilrichtung drehen
	Das Schutzgitter und/oder der Kopf wurden hochgehoben	Das Schutzgitter und den Kopf senken
	Der Drehknopf des Hauptschalters steht auf "0";	Den Drehknopf auf “1” stellen.
	Der Drehknopf der Zeitschaltung steht auf “0”	Den Drehknopf von 1 bis 30 Minuten entsprechend einstellen
Die Knetspirale dreht sich ungleichmäßig	Die Kette hat sich gelockert	Die Kette wie in Abschnitt 7.2.2 beschrieben, spannen.

6 HINWEISE ZU VERSCHROTTUNG UND ENTSORGUNG

Die Verschrottung und Entsorgung der Maschine ist einzig und allein Aufgabe des Besitzers, der unter Einhaltung der geltenden Bestimmungen bezüglich der Sicherheit und dem Umweltschutz in seinem Land vorgehen muss.
Die Zerlegung und Entsorgung kann auch Drittpersonen anvertraut werden, wenn man auf Unternehmen zurückgreift, die zur Rückgewinnung und Beseitigung der betreffenden Materialien berechtigt sind.

☞ **HINWEIS**: immer und auf jeden Fall die geltenden Bestimmungen des Landes einhalten, in dem die Entsorgung des Materials durchgeführt wird, gegebenenfalls auch die Entsorgungsmeldung veranlassen.

! **ACHTUNG**: Alle Demontagearbeiten für die Verschrottung müssen bei stillstehender und spannungsloser Maschine erfolgen.
- den gesamten elektrischen Apparat herausnehmen;
- die Speicher der elektronischen Karten trennen;
- das Maschinengestell über zugelassene Unternehmen verschrotten lassen;

! **ACHTUNG**: Das Verwahrlosen der Maschine in zugänglichen Bereichen bildet für Personen und Tiere eine schwere Gefahr.
Die Haftung für Schäden an Personen oder Tieren fällt immer auf den Besitzer zurück.

INFORMATIONEN FÜR DEN BENUTZER

Das Gerät gehört zum Applikationsbereich der europäischen Richtlinien 2002/95/EG, 2002/96/EG, 2003/108/EG, die vorschreiben, dass dieses Produkt nicht mit dem normalen Hausmüll entsorgt werden darf. Um möglichen Umwelt- oder Gesundheitsschäden vorzubeugen, wird gebeten, dieses Produkt vom anderen Müll getrennt zu halten, um es umweltsicher wiederverwerten zu können.

Für weitere Informationen zu Sammelstellen kontaktieren Sie bitte das Gemeindeamt oder den Händler, bei dem das Produkt gekauft wurde.

WIRING DIAGRAMS IF ÷ IR ÷ IFM ÷ IRM

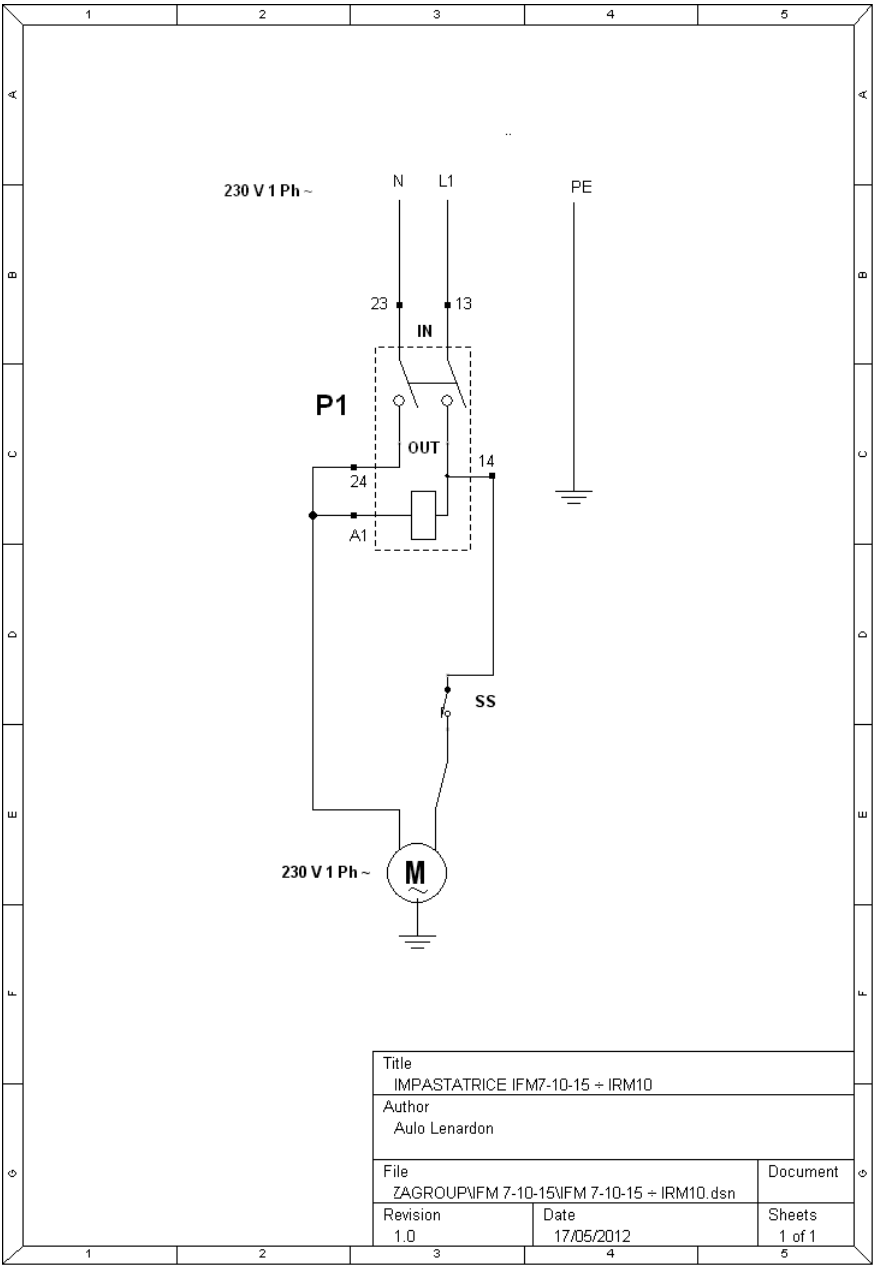

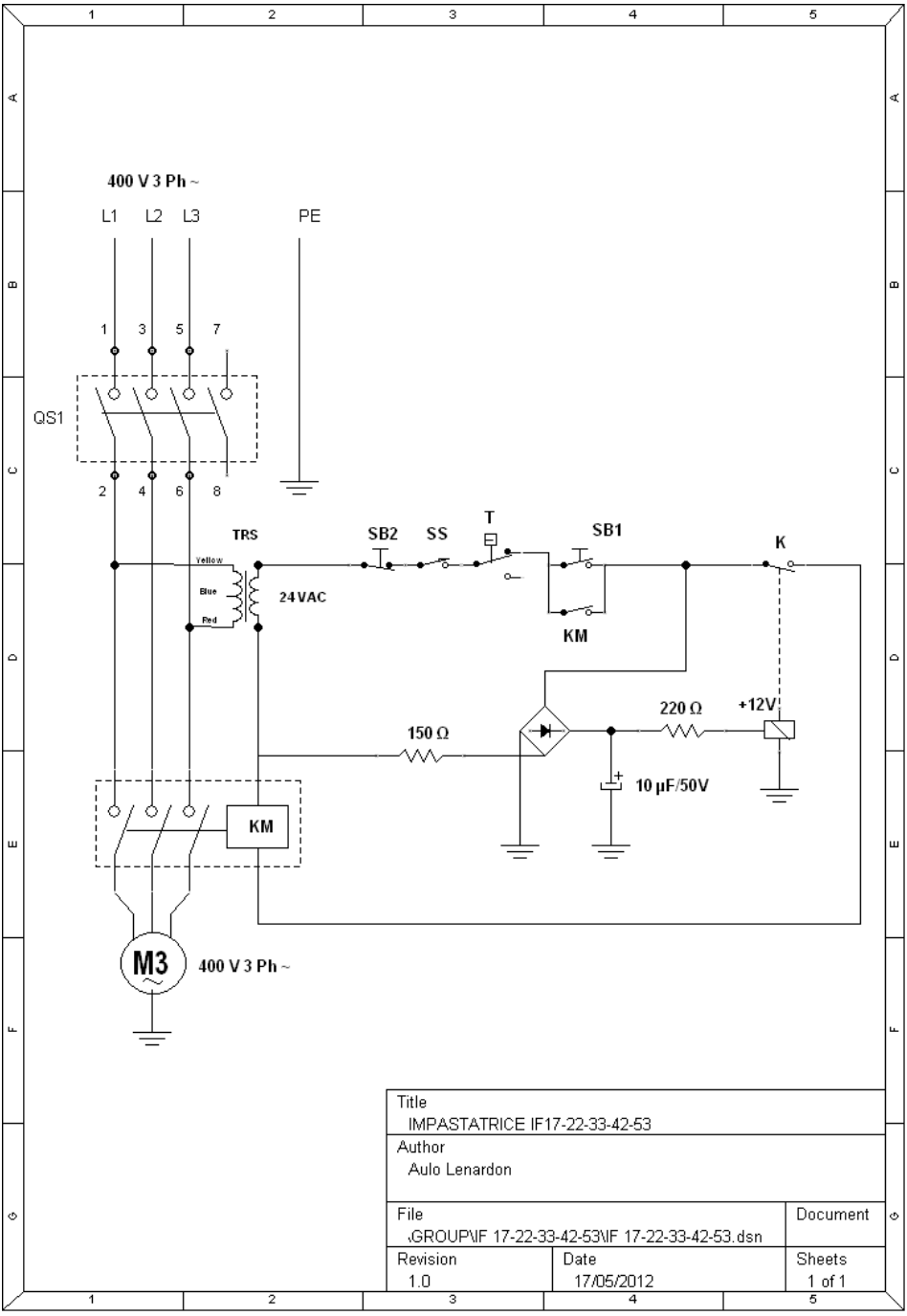
400 V 3 Ph ~
L1
L2
L3
PE
1
3
5
7
QS1
2
4
6
8
TRS
Yellow
Blue
Red
24 VAC
SB2
SS
T
SB1
K
KM
150 Ω
220 Ω
+12V
10 µF/50V
KM
M3
400 V 3 Ph ~
Title
IMPASTATRICE IF17-22-33-42-53
Author
Aulo Lenardon
File
.\GROUP\IF 17-22-33-42-53\IF 17-22-33-42-53.dsn
Document
Revision
1.0
Date
17/05/2012
Sheets
1 of 1

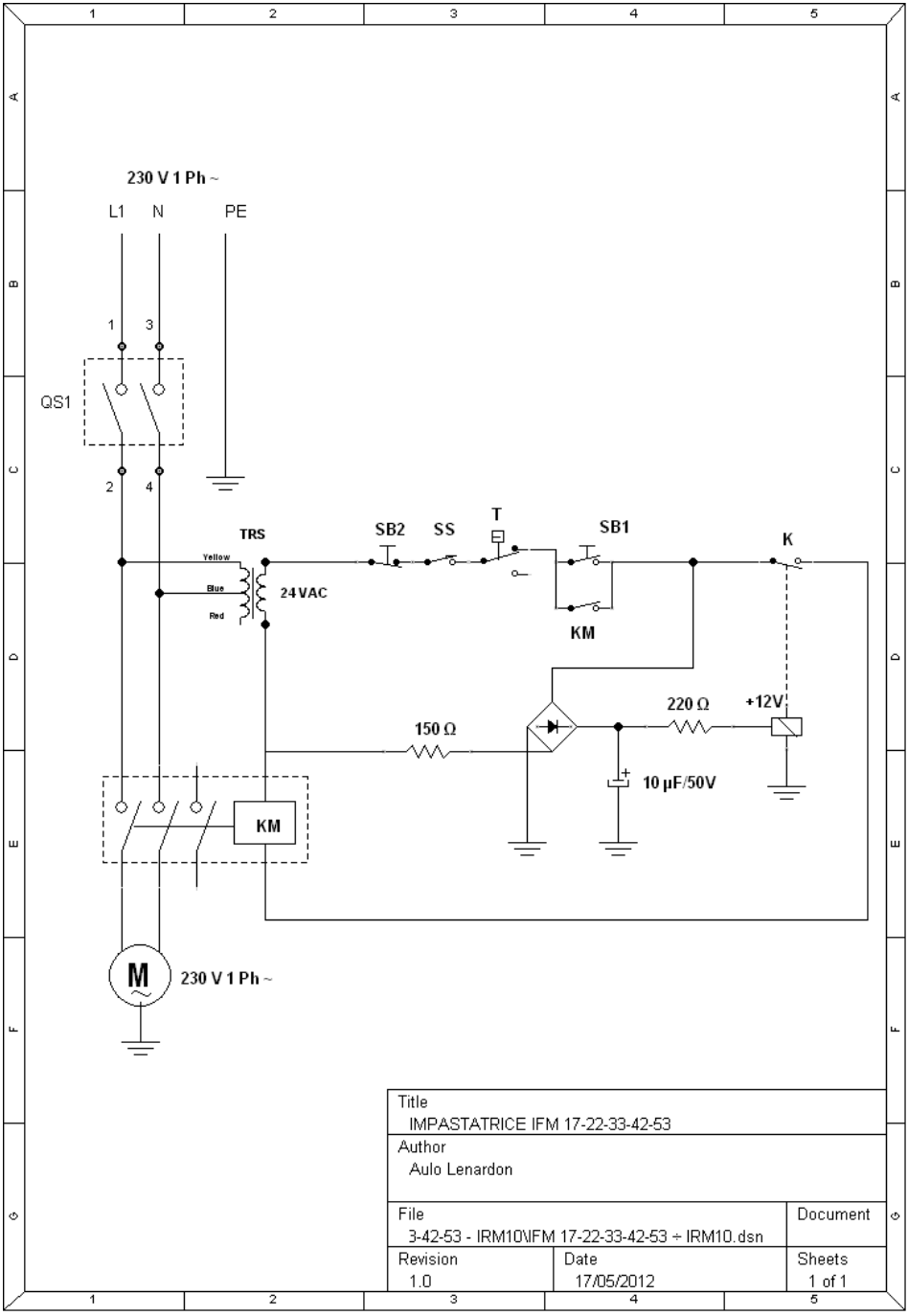
230 V 1 Ph ~
L1
N
PE
1
3
QS1
2
4
TRS
Yellow
Blue
Red
24 VAC
SB2
SS
T
SB1
K
KM
220 Ω
+12V
150 Ω
10 µF/50V
KM
M
230 V 1 Ph ~
Title
IMPASTATRICE IFM 17-22-33-42-53
Author
Aulo Lenardon
File
3-42-53 - IRM10\IFM 17-22-33-42-53 - IRM10.dsn
Document
Revision
1.0
Date
17/05/2012
Sheets
1 of 1

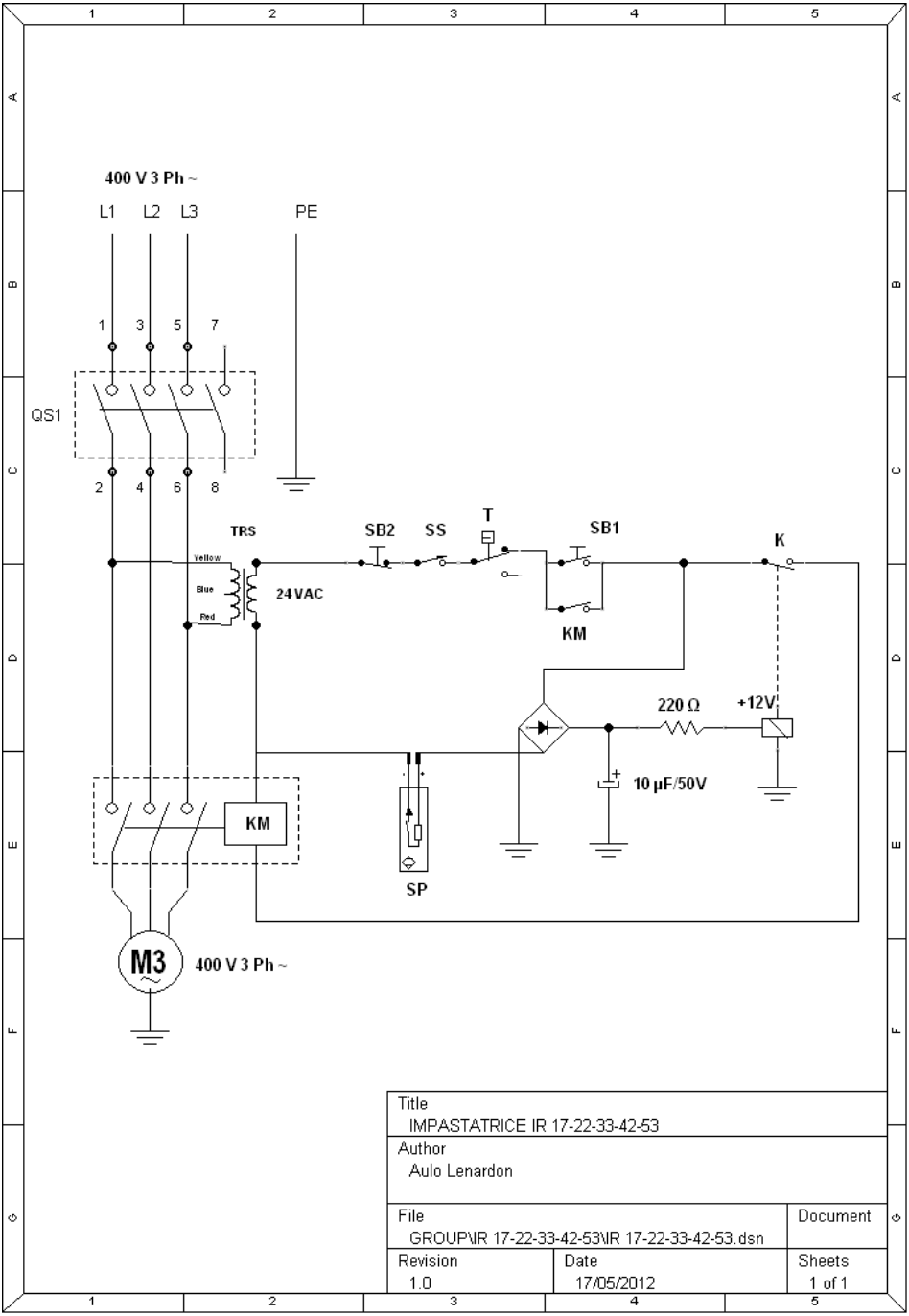

Title IMPASTATRICE IR 17-22-33-42-53		
Author Aulo Lenardon		
File GROUP\IR 17-22-33-42-53\IR 17-22-33-42-53.dsn		Document
Revision 1.0	Date 17/05/2012	Sheets 1 of 1

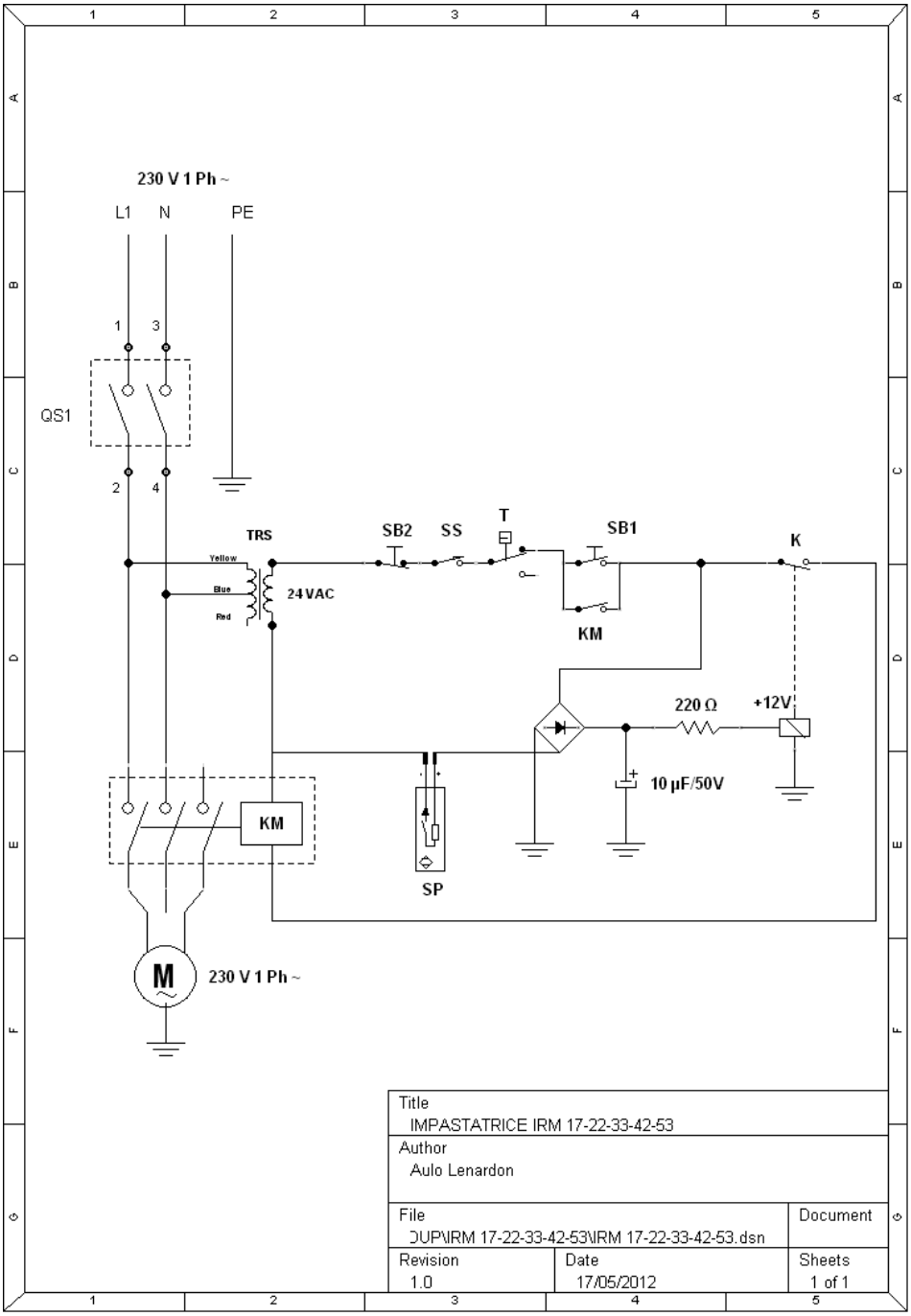

Title IMPASTATRICE IRM 17-22-33-42-53		
Author Aulo Lenardon		
File DUP\IRM 17-22-33-42-53\IRM 17-22-33-42-53.dsn		Document
Revision 1.0	Date 17/05/2012	Sheets 1 of 1

WIRING DIAGRAMS IF-VS ÷ IR-VS

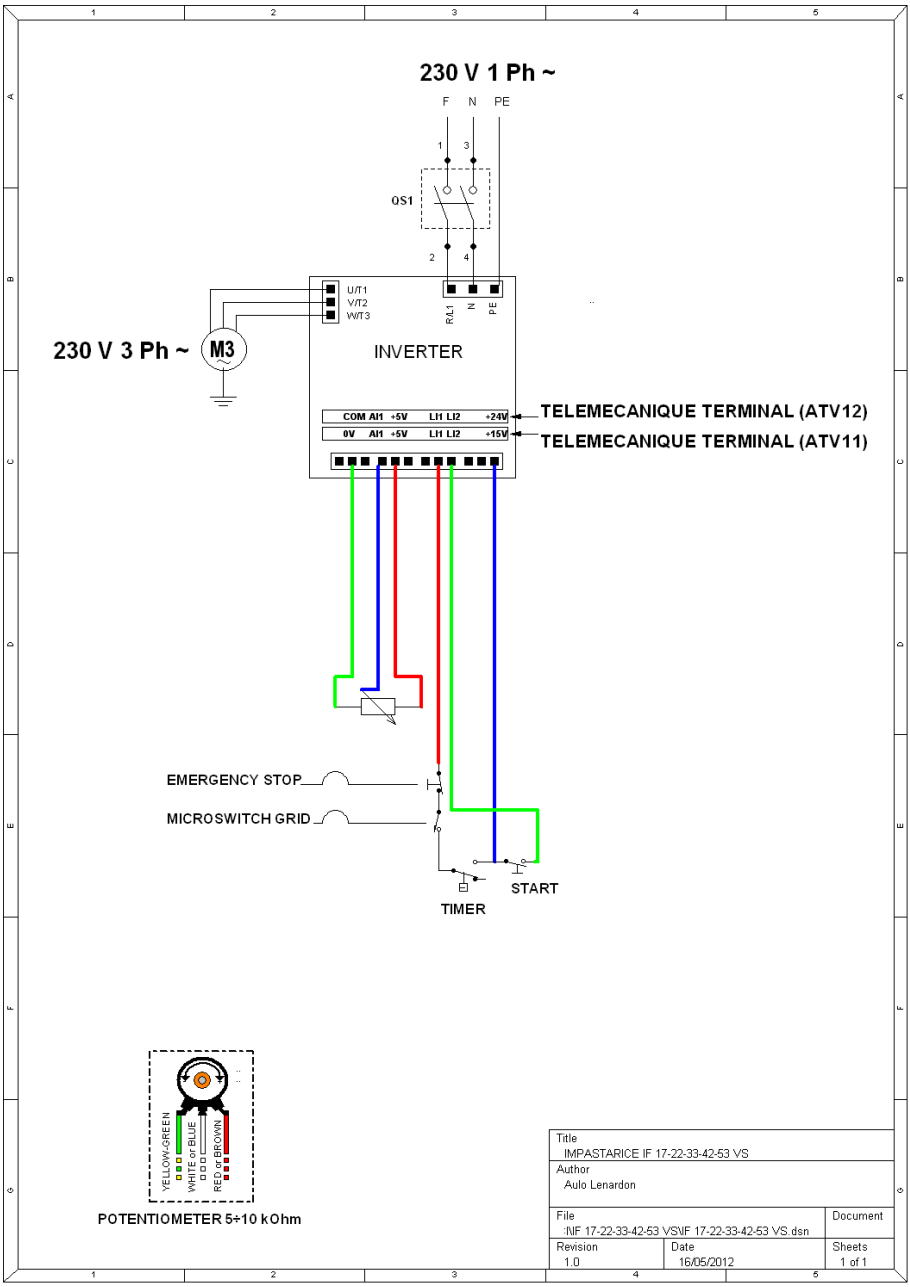

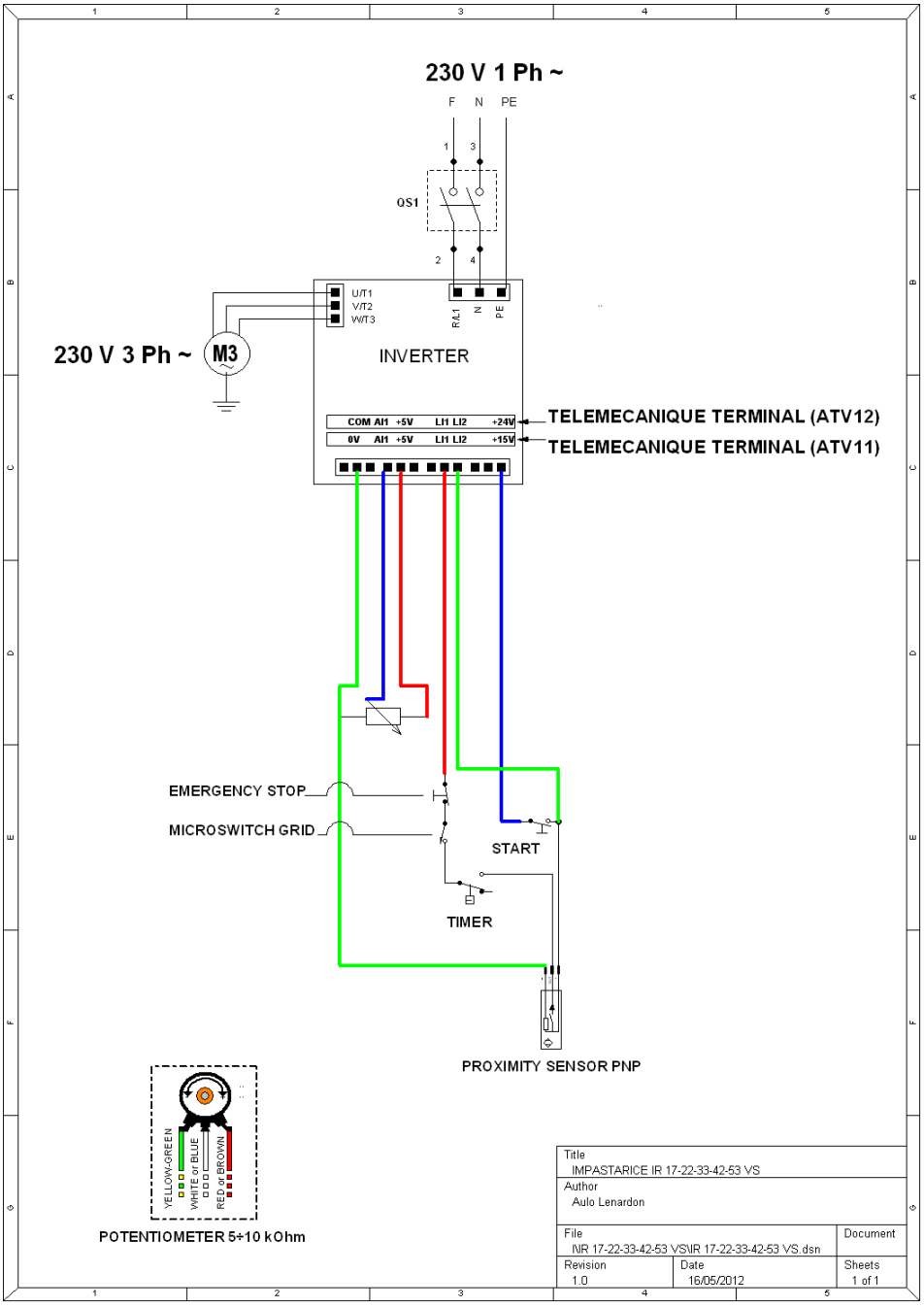
230 V 1 Ph ~
F
N
PE
1
3
2
4
QS1
230 V 3 Ph ~
M3
U/T1
V/T2
W/T3
R/L1
N
PE
INVERTER
COM AI1 +5V LI1 LI2 +24V
0V AI1 +5V LI1 LI2 +15V
TELEMECANIQUE TERMINAL (ATV12)
TELEMECANIQUE TERMINAL (ATV11)
EMERGENCY STOP
MICROSWITCH GRID
START
TIMER
PROXIMITY SENSOR PNP
YELLOW-GREEN
WHITE or BLUE
RED or BROWN
POTENTIOMETER 5÷10 kOhm
Title
IMPASTARICE IR 17-22-33-42-53 VS
Author
Aulo Lenardon
File
NR 17-22-33-42-53 VS\IR 17-22-33-42-53 VS.dsn
Document
Revision
1.0
Date
16/05/2012
Sheets
1 of 1

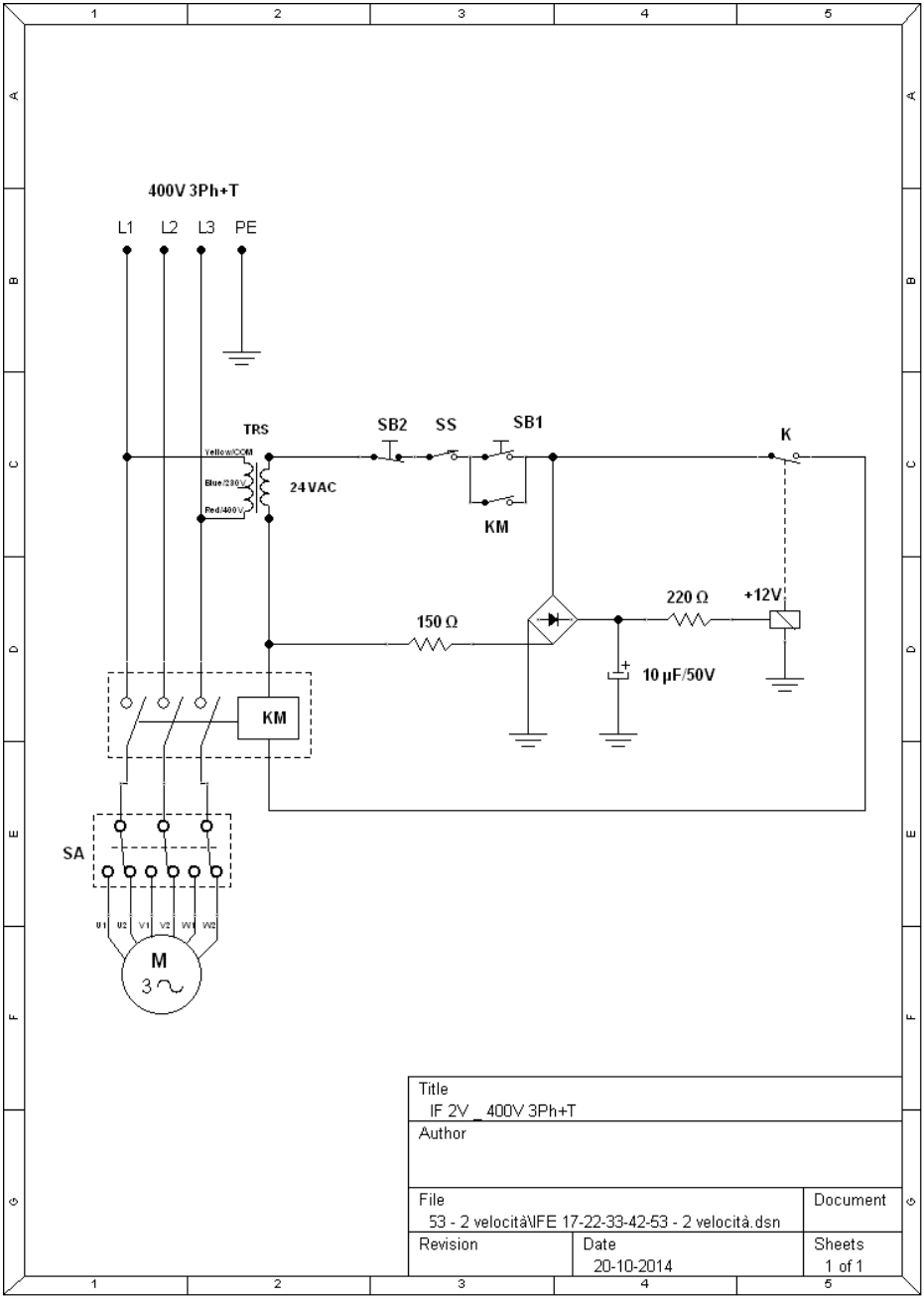
400V 3Ph+T
L1
L2
L3
PE
TRS
Yellow/COM
Blue/230V
Red/400V
24 VAC
SB2
SS
SB1
K
KM
220 Ω
+12V
150 Ω
10 µF/50V
KM
SA
U1
U2
V1
V2
W1
W2
M
3~
Title
IF 2V _ 400V 3Ph+T
Author
File
53 - 2 velocità\IFE 17-22-33-42-53 - 2 velocità.dsn
Document
Revision
Date
20-10-2014
Sheets
1 of 1

WIRING DIAGRAMS IF-2V ÷ IR-2V

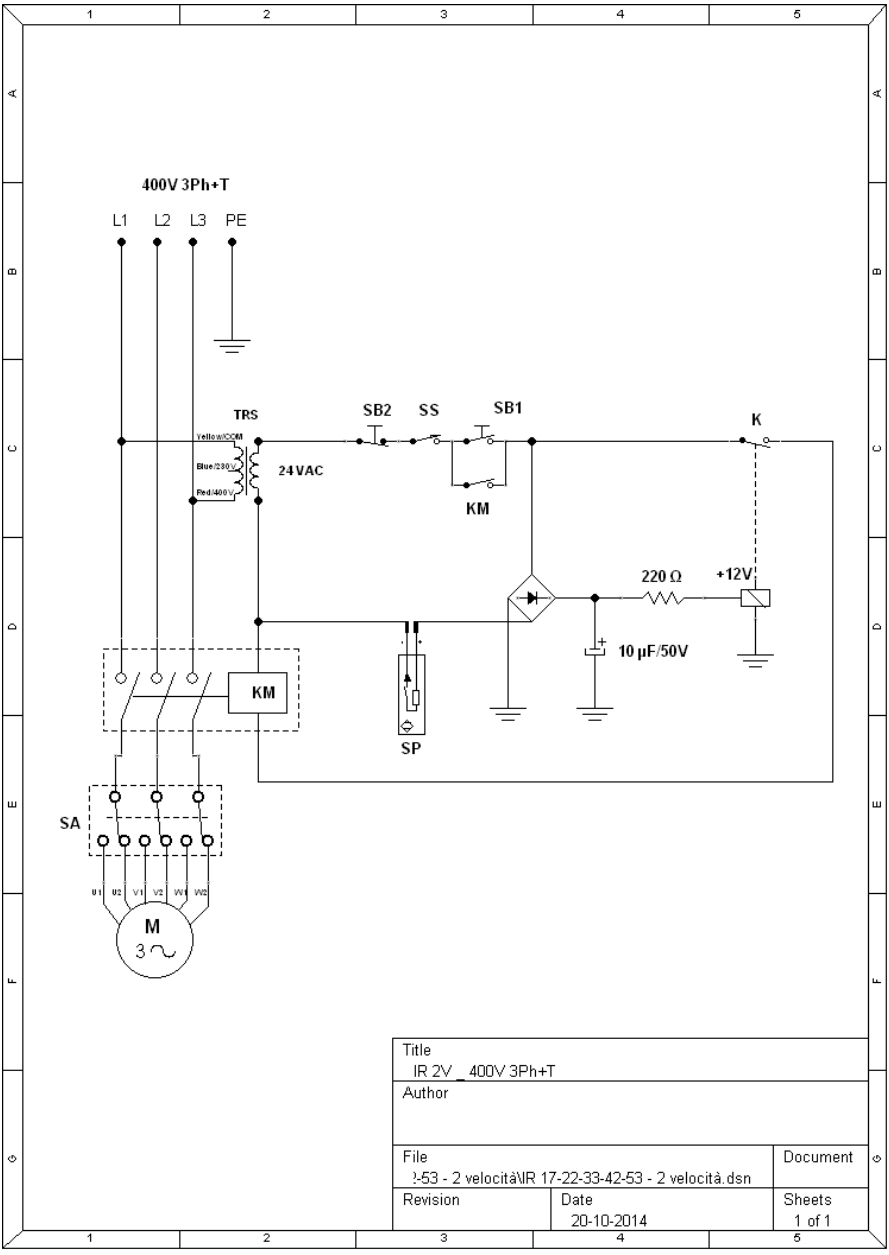

Legenda	
QS1	Interruttore generale
SA	Selettore 1-0-2
TRS	Trasformatore
P1	Pulsante Avvio/Arresto “0-1”
SB1	Pulsante Avviamento
SB2	Pulsante Arresto
T	Timer 0-30 minuti
SS	Fine corsa di sicurezza
SP	Sensore di prossimità
KM	Contattore
M / M3	Motore

Legend	
QS1	Main switch
SA	Selector 1-0-2
TRS	Trasformer
P1	Start/Stop button “0-1”
SB1	Sart button
SB2	Stop button
T	Timer 0-30 minutes
SS	Safety micro switch
SP	Proximity sensor
KM	Contactor
M / M3	Motor

EXPLODED VIEW and SPARE PARTS LIST IF÷IR÷IFM÷IRM÷IF2V÷IR2V

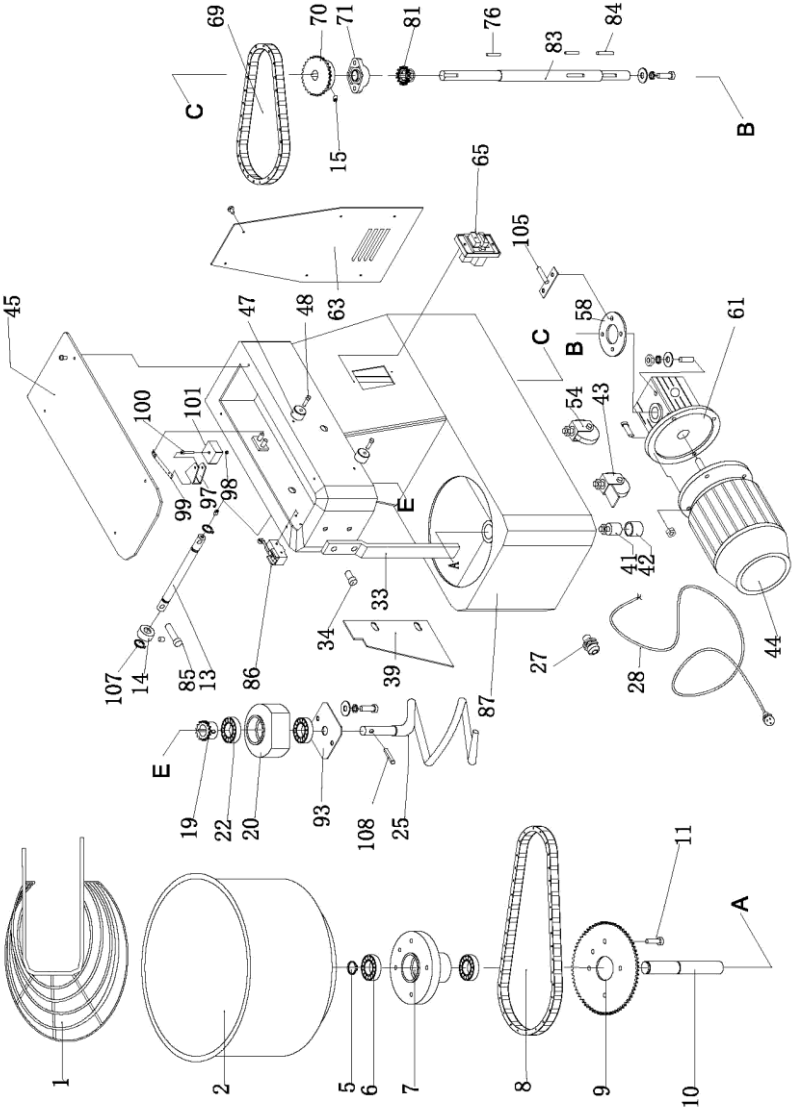

IFM7 – IFM10 – IFM15

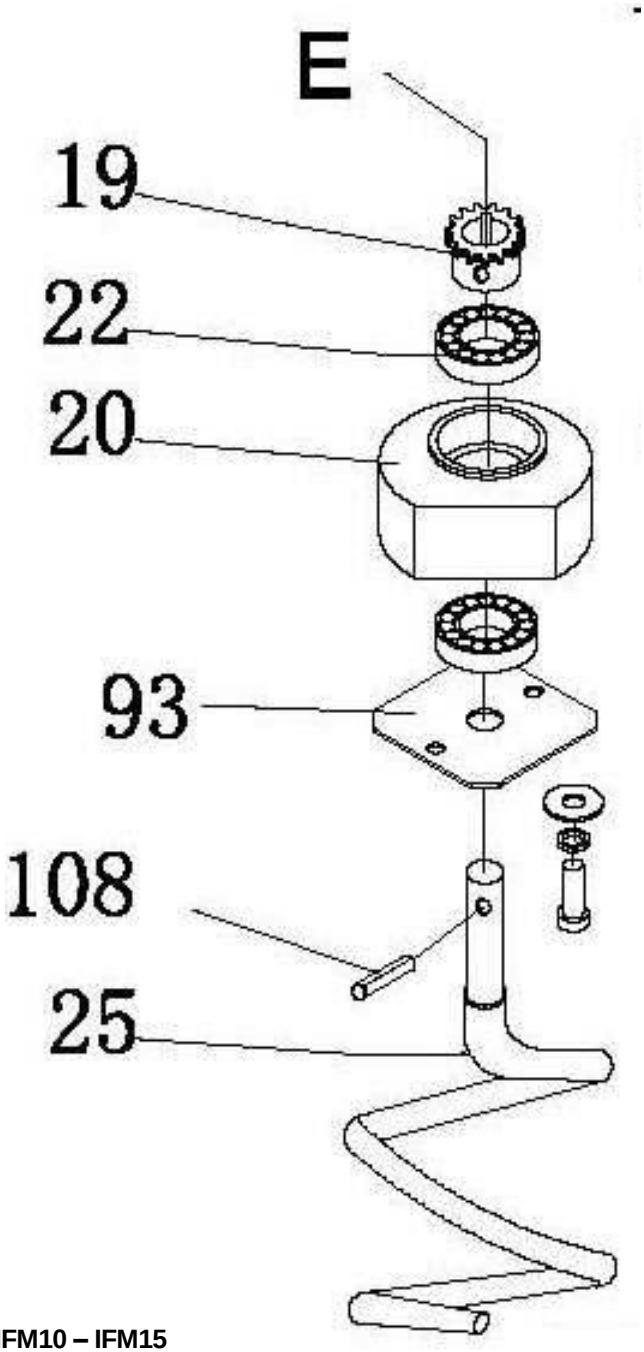

IFM7 – IFM10 – IFM15

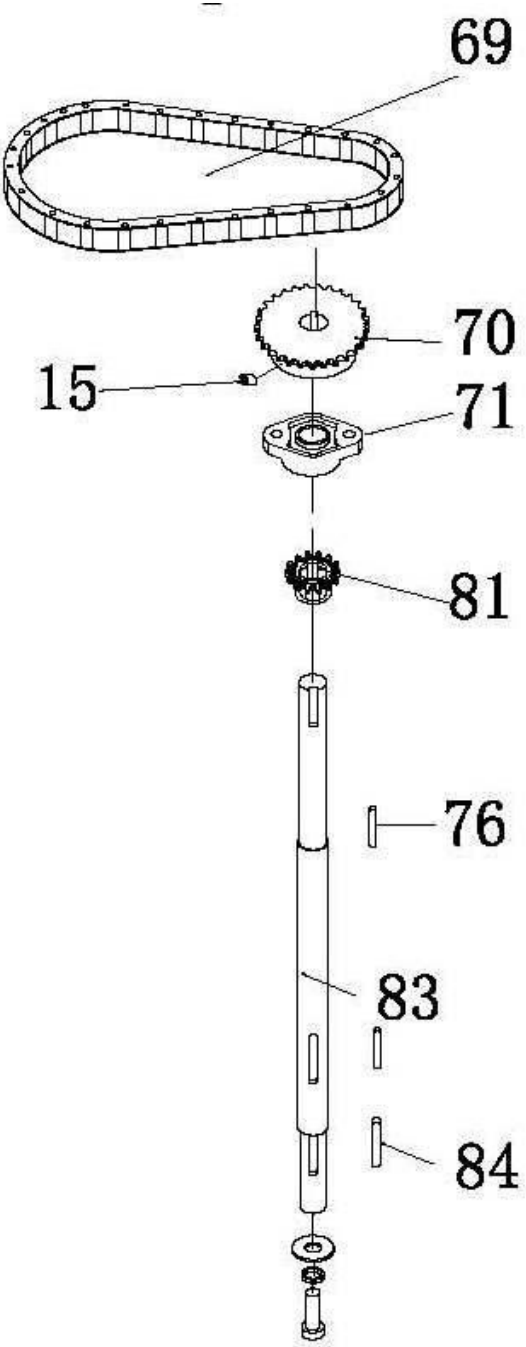

IFM7 – IFM10 – IFM15

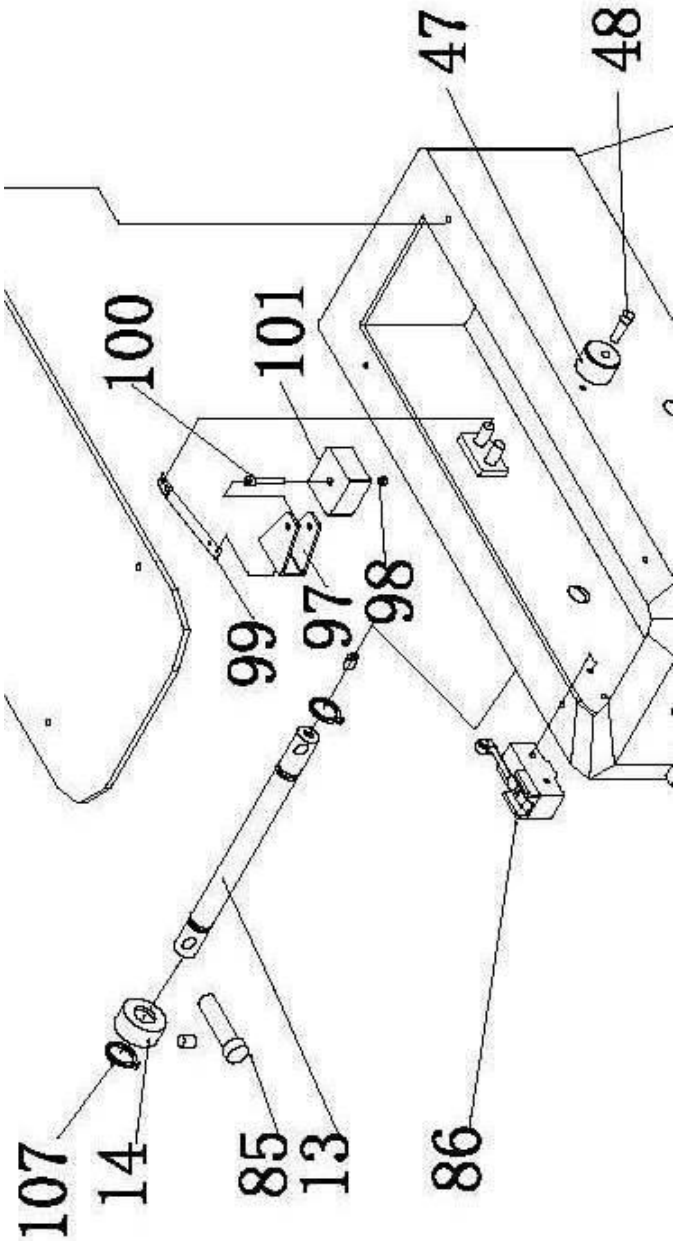

IFM7 – IFM10 – IFM15

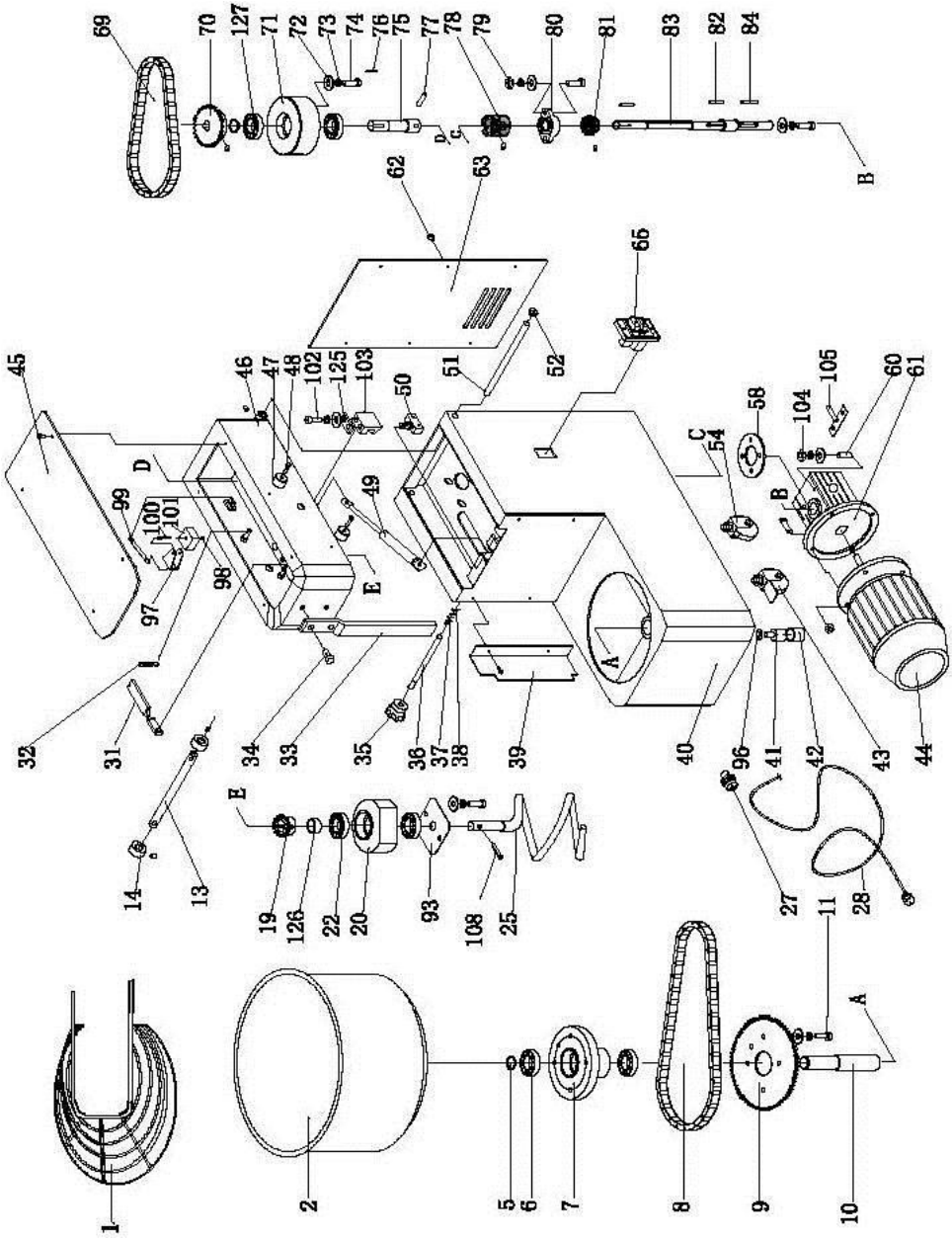
69
70
127
71
72
73
74
76
75
77
78
79
80
81
83
82
84
B
62
63
65
45
46
47
48
102
125
103
50
51
52
105
60
61
58
104
C
54
B
D
99
100
101
49
98
97
E
A
32
31
34
33
35
36
37
38
39
40
96
41
42
43
44
E
14
13
19
126
22
20
93
108
25
27
28
11
A
1
2
5
6
7
8
9
10

IRM10

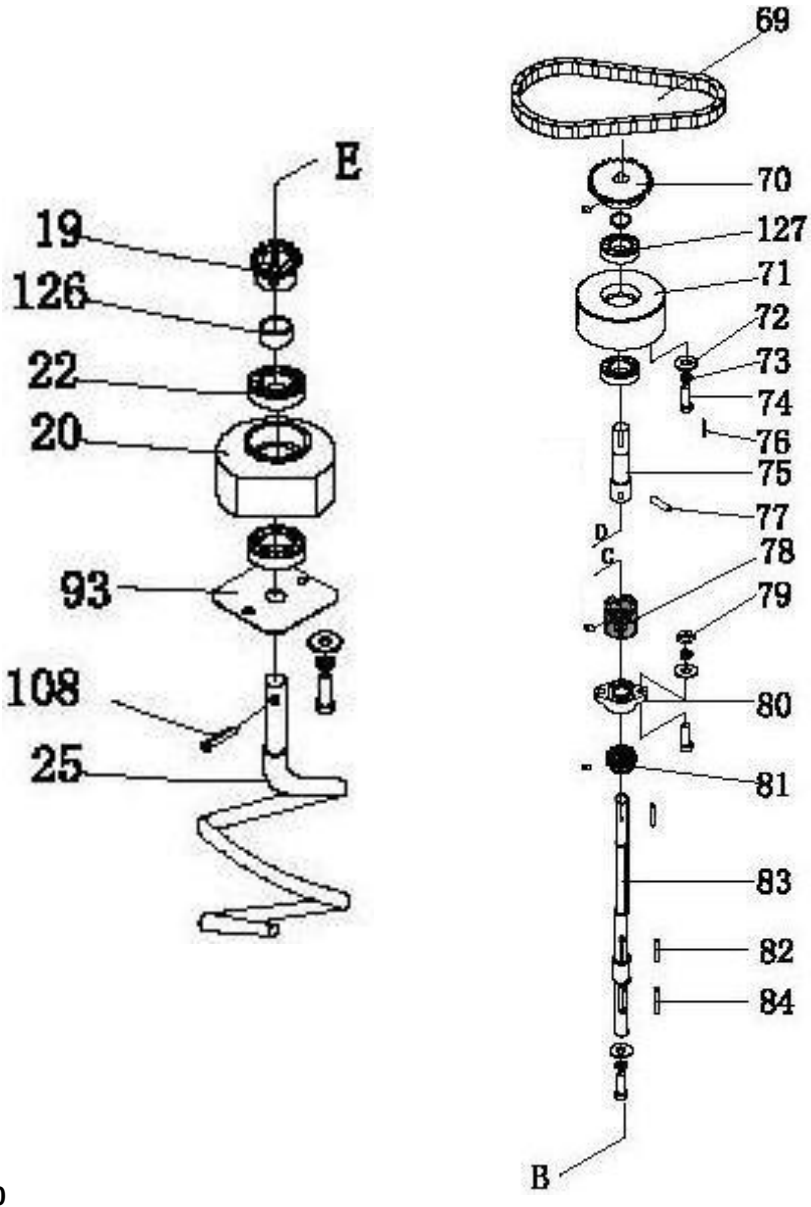
E
19
126
22
20
93
108
25
69
70
127
71
72
73
74
76
75
77
D
C
78
79
80
81
83
82
84
B

IRM10

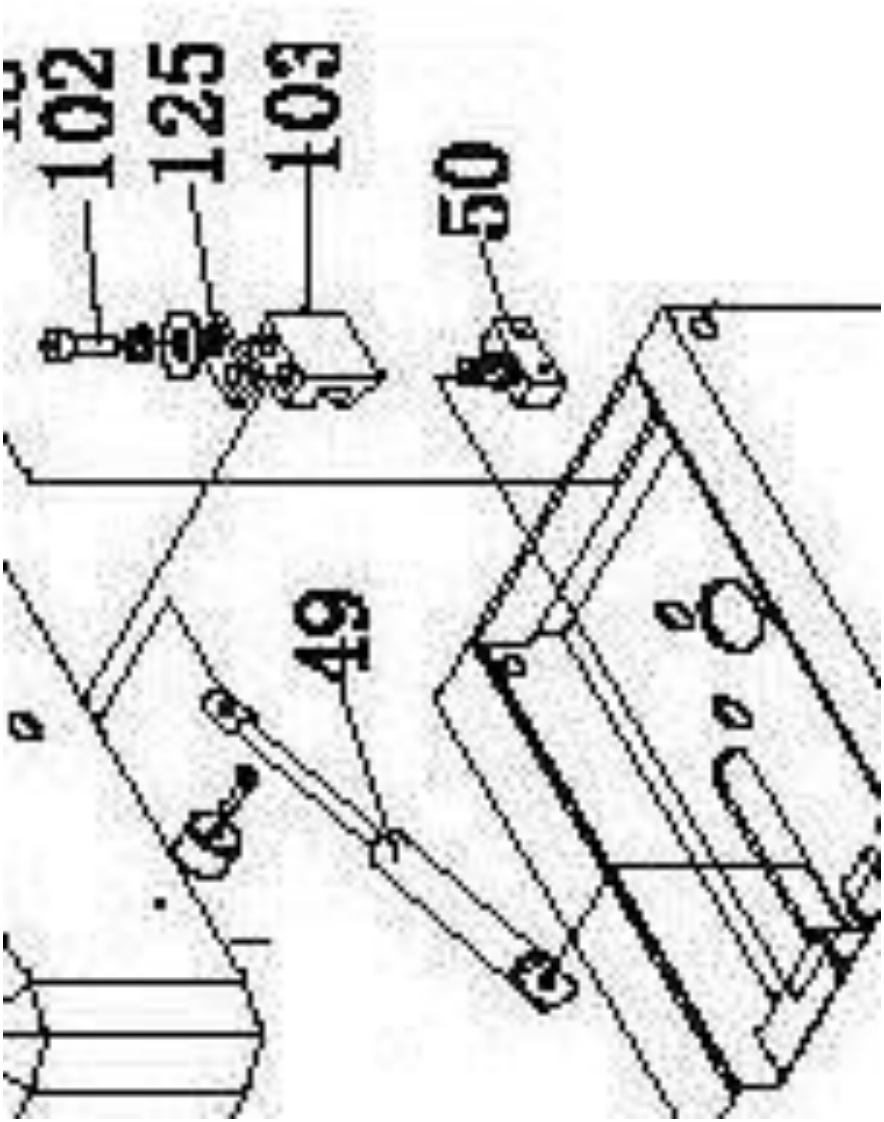

IRM10

POS.	IFM7	DESCRIPTION	IFM10	DESCRIPTION
1	A96ZE00015	Grid IFM7	A96ZE00022	Safety guard IFM 10
2	A96ZV00029	Bowl IFM 7	A96ZV00031	Bowl IFM 10
5	A96ZD00001	Snap ring diam. 25 IF/IR	A96ZD00001	Snap ring diam. 25 IF/IR
6	A89CK00012	Bearing 6204-2RS TFM 7÷10÷15	A89CK00012	Bearing 6204-2RS TFM 7÷10÷15
7	A96ZV00035	Support bowl base IFM 7/10/15	A96ZV00035	Support bowl base IFM 7/10/15
8	A96ZN00094	Bowl chain 06B/96 IFM 7	A96ZN00061	Bowl chain 06B/102 TFM 7÷10÷15
9	A96ZN00062	Chain wheel z=50 06B IFM 7/10/15	A96ZN00062	Chain wheel z=50 06B IFM 7/10/15
10	A96ZI00034	Bowl base shaft IFM 7/10/15	A96ZI00034	Bowl base shaft IFM 7/10/15
11	A86ME24115	Screw M8x35 TF÷TR	A86ME24115	Screw M8x35 TF÷TR
13	S63FS67002	Safety guard pin IFM 7/10/15	S63FS67002	Safety guard pin IFM 7/10/15
14	A96ZE00012	Cam for safety guard IF	A96ZE00012	Cam for safety guard IF
15	A86ME32013	Screw M8x10 TF÷TR	A86ME32013	Screw M8x10 TF÷TR
19	A96ZH00016	Chain pinion gear z=11 06B IFM 7/10/15	A96ZH00016	Chain pinion gear z=11 06B IFM 7/10/15
20	A96ZS00014	Spiral base IFM 7/10/15	A96ZS00014	Spiral base IFM 7/10/15
22	A89CK00013	Bearing 6202-2RS TFM 7÷10÷15	A89CK00013	Bearing 6202-2RS TFM 7÷10÷15
25	A96ZS00011	Spiral IFM 7	A96ZS00012	Spiral IFM 10/15
27	A96ZN00025	Wire clip IF/IR	A96ZN00025	Wire clip IF/IR
28	A96ZN00047	Feed cable IFM/IRM	A96ZN00047	Feed cable IFM/IRM
33	A96ZA00006	Rod breaking dough IFM7	A96ZA00007	Rod breaking dough IFM10
34	A86ME24016	Screw TE M6X25 ZN	A86ME24016	Screw TE M6X25 ZN
39	A96ZB00009	Side safety panel IFM 7	A96ZB00011	Side safety panel IFM 10
41	A96ZF00011	Steel Foot M12 IF/IR	A96ZF00011	Steel Foot M12 IF/IR
42	A96ZF00019	Insert for plastic foot IF/IR	A96ZF00019	Insert for plastic foot IF/IR
43	A96ZG00003	Wheel with brake M12 IF/IR	A96ZG00003	Wheel with brake M12 IF/IR
44	A96ZJ00027	Motor 230 V - 0,3 kW - 50 Hz - 63 - B14 - IFM 7	A96ZJ00020	Motor 230 V - 0,37 kW - 50 Hz - 71 - B14 - IFM 10/15
45	A96ZC00010	Upper panel IFM 7	A96ZC00010	Upper panel IFM 7
47	A96ZD00002	Ring in nylon IF/IR	A96ZD00002	Ring in nylon IF/IR
48	A86ME24119	Screw M4x30 TF÷TR	A86ME24119	Screw M4x30 TF÷TR
54	A96ZG00004	Wheel without brake M12 IF/IR	A96ZG00004	Wheel without brake M12 IF/IR
58	A96ZL00012	Flange fixing reductor IFM 7	A96ZL00014	Flange fixing reductor TFM 10÷15
61	A96ZL00013	Gear box CM30 63 B14 1/40 IFM 7	A96ZL00019	Gear box 71 B14 1/40 IFM 10/15
63	A96ZC00011	Back panel IFM 7	A96ZC00012	Back panel IFM 10/15
65	A96ZN00083	Red/green Start/stop KJD17 button IFM 7/10/15 RM 230V 50HZ	A96ZN00083	Red/green Start/stop KJD17 button IFM 7/10/15 RM 230V 50HZ
69	A96ZN00063	Spiral chain 06B/68 TFM 7	S14MT67005	Spiral chain 06B/74 TFM 10
70	A96ZH00012	Chain pinion gear z=23 06B IFM 7/10/15	A96ZH00012	Chain pinion gear z=23 06B IFM 7/10/15
71	A96ZI00035	Base transmission shaft UCFL 204 IFM 7/10/15	A96ZI00035	Base transmission shaft UCFL 204 IFM 7/10/15
76	A86ME36006	Key 6X6X30	A86ME36006	Key 6X6X30
81	A96ZH00008	Chain pinion gear z=14 06B TF/TR 17/22	A96ZH00008	Chain pinion gear z=14 06B TF/TR 17/22
83	A96ZI00036	Transmission shaft IFM 7	A96ZI00037	Transmission shaft IFM 10/15
84	A86ME36011	Key 6x6x40 TFM 7÷10÷15	A86ME36011	Key 6x6x40 TFM 7÷10÷15
86	A96ZN00030	Micro-switch IF	A96ZN00030	Micro-switch IF
93	S42PL00001	Spiral plate TFM 7÷10÷15	S42PL00001	Spiral plate TFM 7÷10÷15
97	A96ZN00053	Nylon block base IF/IR	A96ZN00053	Nylon block base IF/IR
98	A86ME25018	Nut M5 ZN	A86ME25018	Nut M5 ZN
99	A96ZN00052	Tensioner base IF/IR	A96ZN00052	Tensioner base IF/IR
100	A86ME24122	Screw TCEI M5x30 TF÷TR	A86ME24122	Screw TCEI M5x30 TF÷TR
101	A96ZN00054	Nylon block	A96ZN00054	Nylon block
105	A96ZV00030	Bowl chain tensioner part IFM 7	A96ZV00032	Bowl chain tensioner part IFM 10/15

POS.	IRM10	DESCRIPTION	IFM15	DESCRIPTION
1	A96ZE00022	Safety guard IFM 10	A96ZE00016	Safety guard IFM 15
2	A96ZV00031	Bowl IFM 10	A96ZV00033	Bowl IFM 15
5	A96ZD00001	Snap ring diam. 25 IF/IR	A96ZD00001	Snap ring diam. 25 IF/IR
6	A89CK00012	Bearing 6204-2RS TFM 7÷10÷15	A89CK00012	Bearing 6204-2RS TFM 7÷10÷15
7	A96ZV00035	Support bowl base IFM 7/10/15	A96ZV00035	Support bowl base IFM 7/10/15
8	A96ZN00061	Bowl chain 06B/102 TFM 7÷10÷15	A96ZN00061	Bowl chain 06B/102 TFM 7÷10÷15
9	A96ZN00062	Chain wheel z=50 06B IFM 7/10/15	A96ZN00062	Chain wheel z=50 06B IFM 7/10/15
10	A96ZI00034	Bowl base shaft IFM 7/10/15	A96ZI00034	Bowl base shaft IFM 7/10/15
11	A86ME24115	Screw M8x35 TF÷TR	A86ME24115	Screw M8x35 TF÷TR
13	S63FS67002	Safety guard pin IFM 7/10/15	S63FS67002	Safety guard pin IFM 7/10/15
14	A96ZE00012	Cam for safety guard IF	A96ZE00012	Cam for safety guard IF
15	A86ME32013	Screw M8x10 TF÷TR	A86ME32013	Screw M8x10 TF÷TR
19	A96ZH00016	Chain pinion gear z=11 06B IFM 7/10/15	A96ZH00018	Chain pinion gear z=12 06B IFM 15 3/8"
20	A96ZS00014	Spiral base IFM 7/10/15	A96ZS00014	Spiral base IFM 7/10/15
22	A89CK00013	Bearing 6202-2RS TFM 7÷10÷15	A89CK00013	Bearing 6202-2RS TFM 7÷10÷15
25	A96ZS00012	Spiral IFM 10/15	A96ZS00012	Spiral IFM 10/15
27	A96ZN00025	Wire clip IF/IR	A96ZN00025	Wire clip IF/IR
28	A96ZN00047	Feed cable IFM/IRM	A96ZN00047	Feed cable IFM/IRM
33	A96ZA00007	Rod breaking dough IFM10	A96ZA00008	Rod breaking dough IFM 15
34	A86ME24016	Screw TE M6X25 ZN	A86ME24016	Screw TE M6X25 ZN
36	A96ZI00038	Head closing shaft IRM10	-	
39	A96ZB00014	Side safety panel IRM10	A96ZB00010	Side safety panel IFM 15
41	A96ZF00011	Steel Foot M12 IF/IR	A96ZF00011	Steel Foot M12 IF/IR
42	A96ZF00019	Insert for plastic foot IF/IR	A96ZF00019	Insert for plastic foot IF/IR
43	A96ZG00003	Wheel with brake M12 IF/IR	A96ZG00003	Wheel with brake M12 IF/IR
44	A96ZJ00020	Motor 230 V - 0,37 kW - 50 Hz - 71 - B14 - IFM 10/15	A96ZJ00040	Motor 230 V - 0,45 Kw - 50 Hz - 71 - B14 - IFM15
45	A96ZC00010	Upper panel IFM 7	A96ZC00010	Upper panel IFM 7
47	A96ZD00002	Ring in nylon IF/IR	A96ZD00002	Ring in nylon IF/IR
48	A86ME24119	Screw M4x30 TF÷TR	A86ME24119	Screw M4x30 TF÷TR
49	A96ZF00018	Gas spring IR	-	
50	A96ZN00042	Micro-switch IR	-	
51	A96ZI00039	Head rotation shaft IRM10	-	
54	A96ZG00004	Wheel without brake M12 IF/IR	A96ZG00004	Wheel without brake M12 IF/IR
58	A96ZL00014	Flange fixing reductor TFM 10÷15	A96ZL00014	Flange fixing reductor TFM 10÷15
60	A96ZF00023	Screw M6X35 IRM10	-	
61	A96ZL00019	Gear box 71 B14 1/40 IFM 10/15	A96ZL00019	Gear box 71 B14 1/40 IFM 10/15
63	A96ZC00029	Back panel IRM10	A96ZC00012	Back panel IFM 10/15
65	A96ZN00083	Red/green Start/stop KJD17 button IFM 7/10/15 RM 230V 50HZ	A96ZN00083	Red/green Start/stop KJD17 button IFM 7/10/15 RM 230V 50HZ
69	S14MT67005	Spiral chain 06B/74 TFM 10	S14MT67004	Spiral chain 06B/72 TFM 15
70	A96ZH00012	Chain pinion gear z=23 06B IFM 7/10/15	A96ZH00012	Chain pinion gear z=23 06B IFM 7/10/15
71	A96ZF00024	Bearing base IRM10	A96ZI00035	Base transmission shaft UCFL 204 IFM 7/10/15
72	A86ME26023	S.steel washer M8 Øext. 32	-	
73	A86ME26024	S.steel washer grover Ø 8,5 TF÷TR	-	
74	A86ME24115	Screw M8x35 TF÷TR	-	

75	A96ZT00003	Top transmission half-shaft IRM10	-	
76	A86ME36006	Key 6X6X30	A86ME36006	Key 6X6X30
77	A96ZN00027	Connecting pin Ø 10x50 IR	-	
78	A96ZT00001	Transmission coupling IR 17/22	-	
79	A86ME25024	Nut M10 ZN	-	
81	A96ZH00008	Chain pinion gear z=14 06B TF/TR 17/22	A96ZH00008	Chain pinion gear z=14 06B TF/TR 17/22
83	A96ZI00040	Transmission shaft IRM10	A96ZI00037	Transmission shaft IFM 10/15
84	A86ME36011	Key 6x6x40 TFM 7÷10÷15	A86ME36011	Key 6x6x40 TFM 7÷10÷15
86	A96ZN00030	Micro-switch IF	A96ZN00030	Micro-switch IF
93	S42PL00001	Spiral plate TFM 7÷10÷15	S42PL00001	Spiral plate TFM 7÷10÷15
97	A96ZN00053	Nylon block base IF/IR	A96ZN00053	Nylon block base IF/IR
98	A86ME25018	Nut M5 ZN	A86ME25018	Nut M5 ZN
99	A96ZN00052	Tensioner base IF/IR	A96ZN00052	Tensioner base IF/IR
100	A86ME24122	Screw TCEI M5x30 TF÷TR	A86ME24122	Screw TCEI M5x30 TF÷TR
101	A96ZN00054	Nylon block	A96ZN00054	Nylon block
105	A96ZV00032	Bowl chain tensioner part IFM 10/15	A96ZV00032	Bowl chain tensioner part IFM 10/15
127	A89CK00001	Bearing 6004 ZZ	-	

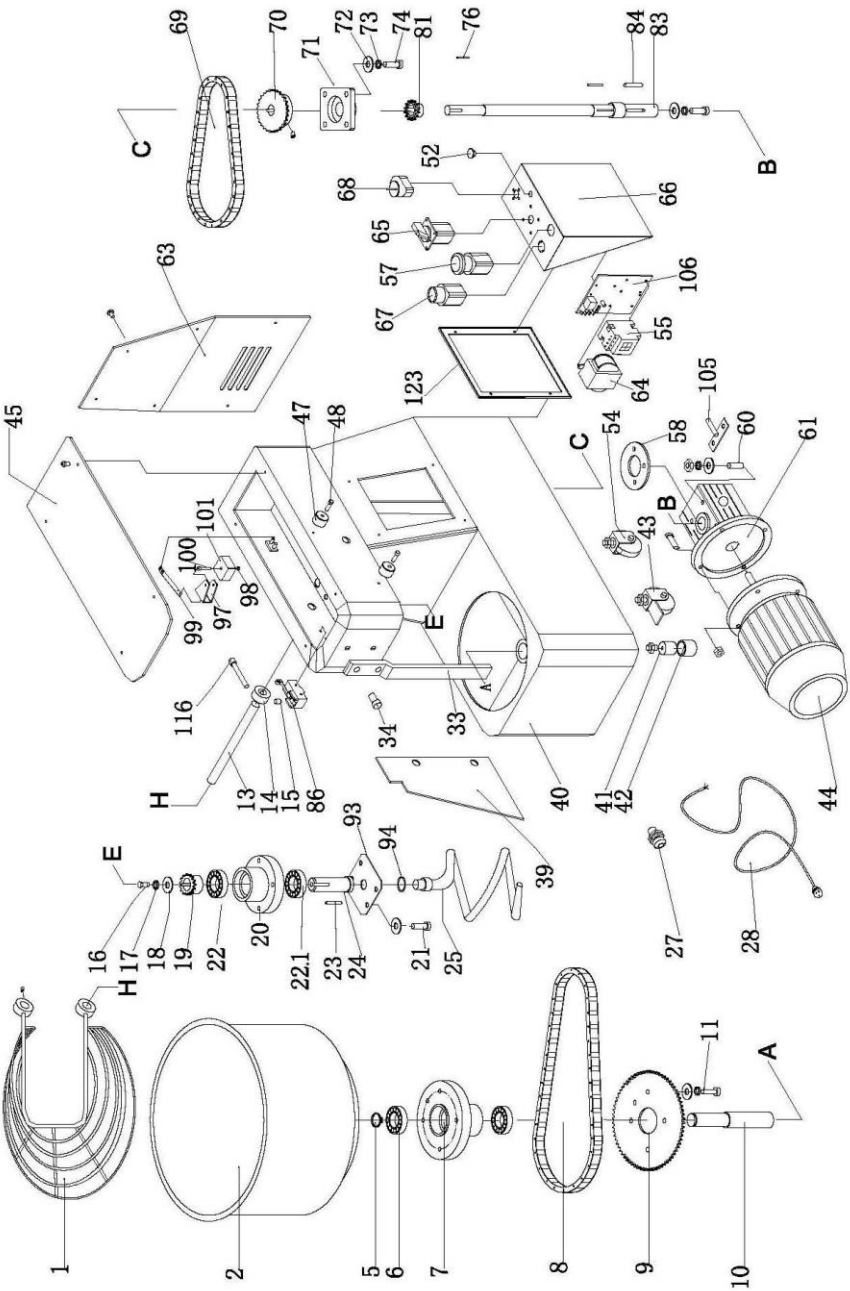

1
2
5
6
7
8
9
10
11
A
H
16
17
18
19
22
22.1
20
23
24
21
25
E
93
94
39
27
28
44
41
42
40
33
34
116
13
14
15
86
45
47
48
101
100
99
97
98
E
C
54
58
60
61
B
43
105
64
123
55
106
63
57
67
65
68
52
66
C
69
70
71
72
73
74
81
76
84
83
B

IF – IFM

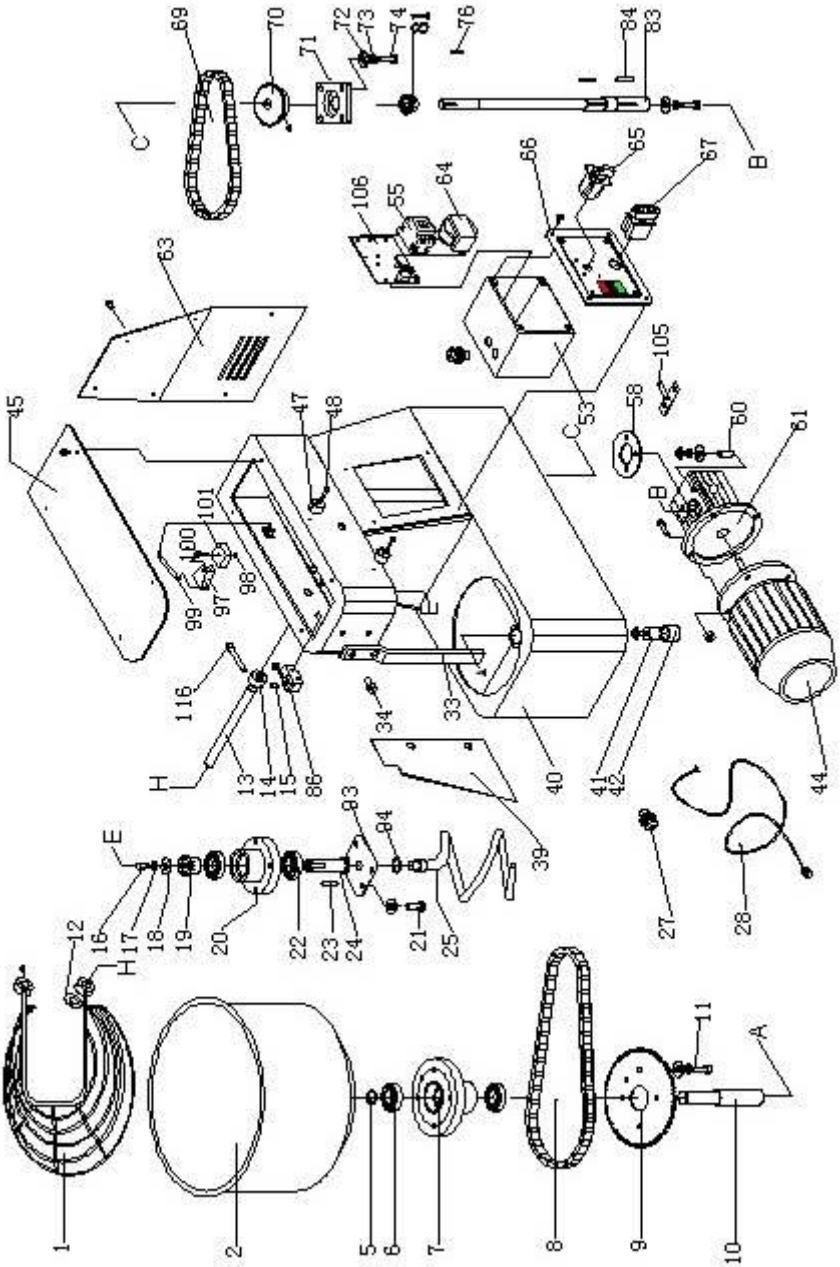
1
2
5
6
7
8
9
10
11
A
12
H
16
17
18
19
20
22
23
24
21
25
E
83
84
39
27
28
H
13
14
15
86
116
34
33
40
41
42
44
45
47
48
101
100
99
97
98
E
C
53
58
60
61
B
105
63
106
55
64
66
65
67
69
70
71
72
73
74
81
76
84
83
B
C

IF 2V

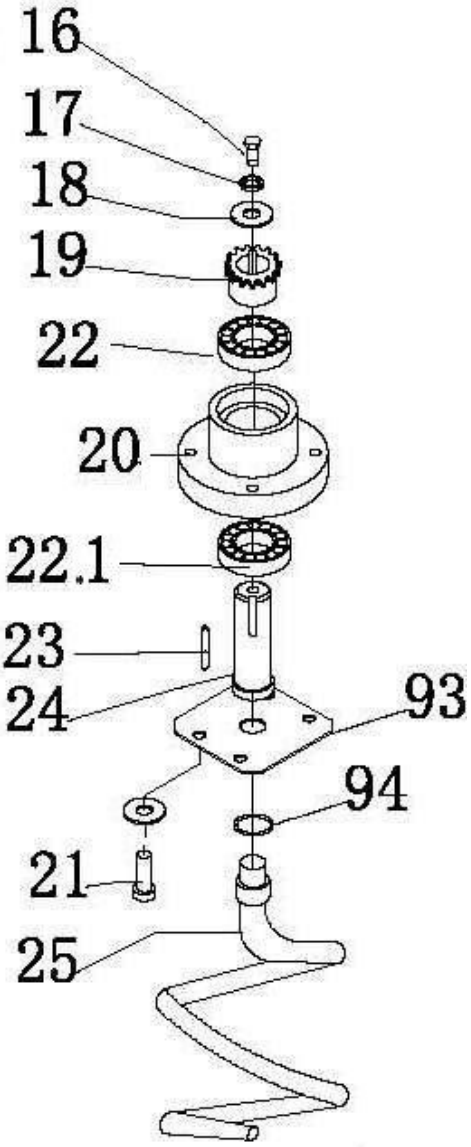

IF - IFM - IF 2V

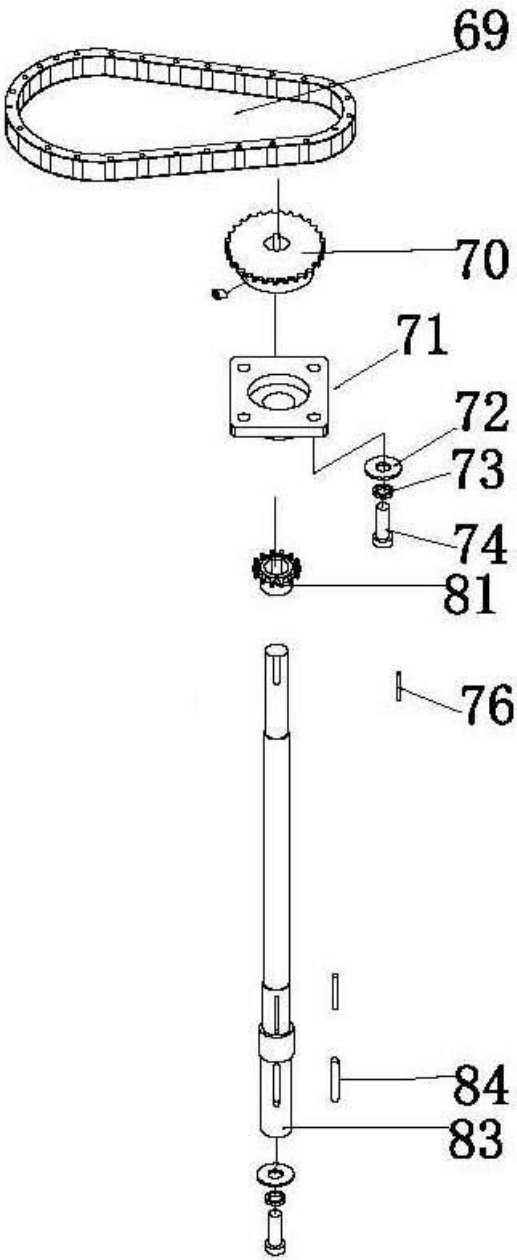

IF - IFM - IF 2V

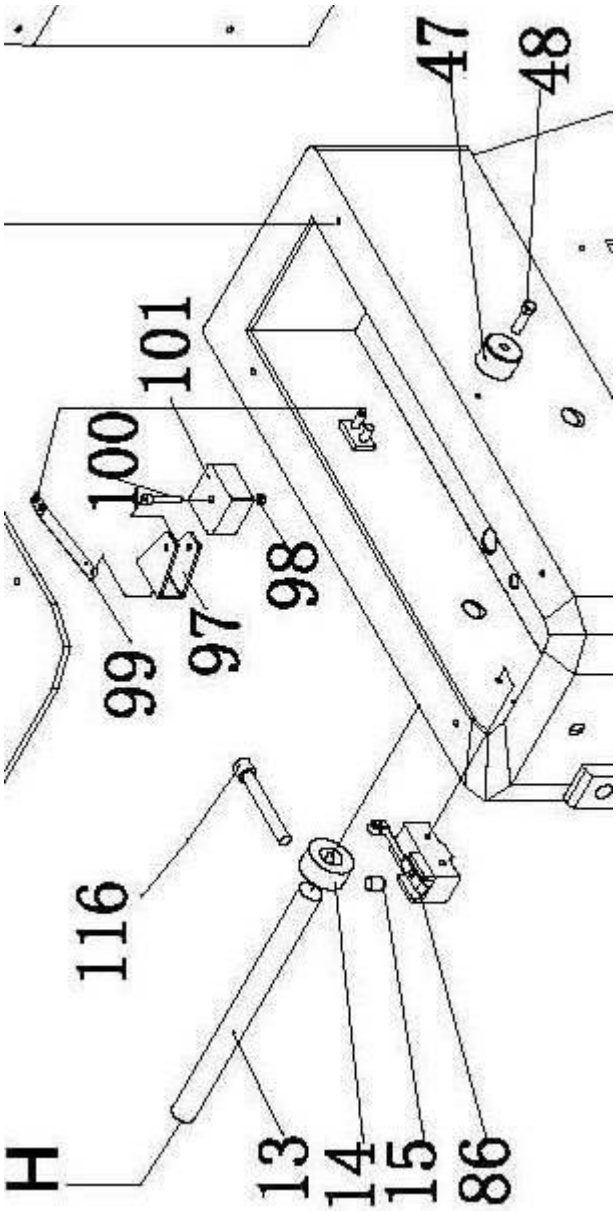

IF - IFM - IF 2V

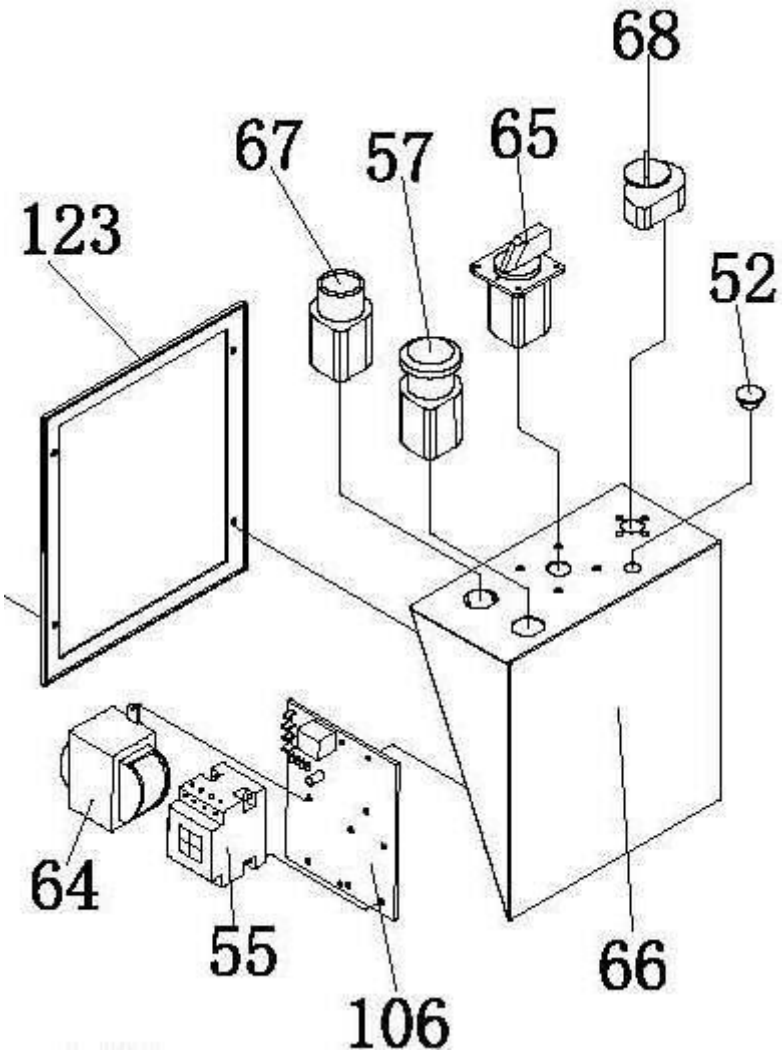

IF-IFM ÷ IR-IRM

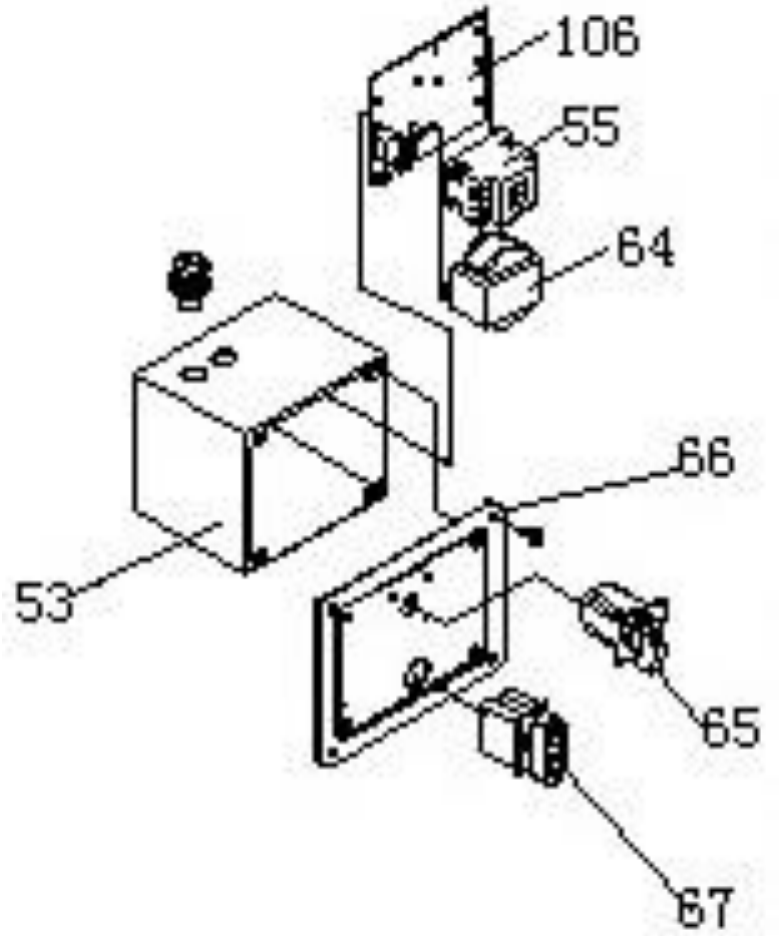

IF 2V-IR 2V

POS.	IF17	DESCRIPTION	IF22	DESCRIPTION
1	A96ZE00007	Safety guard IF/IR 17	A96ZE00008	Safety guard IF/IR 22
2	A96ZV00015	Bowl IF/IR 17	A96ZV00016	Bowl IF/IR 22
5	A96ZD00001	Snap ring diam. 25 IF/IR	A96ZD00001	Snap ring diam. 25 IF/IR
6	A89CK00010	Bearing 6205-2RS TF÷TR	A89CK00010	Bearing 6205-2RS TF÷TR
7	A96ZV00025	Support bowl base IF/IR 17/22/33/42/53	A96ZV00025	Support bowl base IF/IR 17/22/33/42/53
8	S14MT67007	Bowl chain 06B/126 IF÷IR 17÷22	S14MT67007	Bowl chain 06B/126 IF÷IR 17÷22
9	A96ZR00004	Crown z=72 06B IF/IR 17/22	A96ZR00004	Crown z=72 06B IF/IR 17/22
10	A96ZI00013	Bowl support axle IF/IR 17/22/33/42/53	A96ZI00013	Bowl support axle IF/IR 17/22/33/42/53
11	A86ME24115	Screw M8x35 TF÷TR	A86ME24115	Screw M8x35 TF÷TR
13	A96ZI00014	Safety guard pin IF/IR 17/22	A96ZI00014	Safety guard pin IF/IR 17/22
14	A96ZE00012	Cam for safety guard IF	A96ZE00012	Cam for safety guard IF
15	A86ME32013	Screw M8x10 TF÷TR	A86ME32013	Screw M8x10 TF÷TR
16	A86ME24116	Screw M8x25 TF÷TR	A86ME24116	Screw M8x25 TF÷TR
17	A86ME26024	S.steel washer grover Ø 8,5 TF÷TR	A86ME26024	S.steel washer grover Ø 8,5 TF÷TR
18	A86ME26025	S.Steel washer Ø8 TF÷TR	A86ME26025	S.Steel washer Ø8 TF÷TR
19	A96ZH00006	Pinion gear z=15 06B IF/IR 17/22	A96ZH00006	Pinion gear z=15 06B IF/IR 17/22
20	A96ZS00006	Spiral support IF/IF 17/22	A96ZS00006	Spiral support IF/IF 17/22
21	A86ME24114	Screw M8x30	A86ME24114	Screw M8x30
22	A89CK00010	Bearing 6205-2RS TF÷TR	A89CK00010	Bearing 6205-2RS TF÷TR
22.01	A89CK00010	Bearing 6205-2RS TF÷TR	A89CK00010	Bearing 6205-2RS TF÷TR
23	A86ME36008	Key 6x6x20 TF÷TR 17÷22	A86ME36008	Key 6x6x20 TF÷TR 17÷22
24	A96ZI00015	Axle for spiral base IF/IR 17/22	A96ZI00015	Axle for spiral base IF/IR 17/22
25	A96ZS00004	Spiral IF/IR 17/22	A96ZS00004	Spiral IF/IR 17/22
27	A96ZN00025	Wire clip IF/IR	A96ZN00025	Wire clip IF/IR
28	A96ZN00026	Supply wire IF/IR 17/22/33/42/53	A96ZN00026	Supply wire IF/IR 17/22/33/42/53
33	A96ZA00001	Dough breaking rod IF/IR 17	A96ZA00001	Dough breaking rod IF/IR 17
34	A86ME24117	Screw M10x25 TF÷TR	A86ME24117	Screw M10x25 TF÷TR
39	A96ZB00006	Side safety panel IF 17	A96ZB00006	Side safety panel IF 17
41	A96ZF00011	Steel Foot M12 IF/IR	A96ZF00011	Steel Foot M12 IF/IR
42	A96ZF00019	Insert for plastic foot IF/IR	A96ZF00019	Insert for plastic foot IF/IR
43	A96ZG00003	Wheel with brake M12 IF/IR	A96ZG00003	Wheel with brake M12 IF/IR
44	A87MR56010	Motor 400 V - 0,75 kW - 50 Hz 80 B14 IF/IR17/22 + IF/IR17/22 VS	A87MR56010	Motor 400 V - 0,75 kW - 50 Hz 80 B14 IF/IR17/22 + IF/IR17/22 VS
45	A96ZC00002	Cover IF/IR 17/22 (red)	A96ZC00002	Cover IF/IR 17/22 (red)
47	A96ZD00002	Ring in nylon IF/IR	A96ZD00002	Ring in nylon IF/IR
48	A86ME24119	Screw M4x30 TF÷TR	A86ME24119	Screw M4x30 TF÷TR
52	A96ZF00007	Axis cover IR	A96ZF00007	Axis cover IR
54	A96ZG00004	Wheel without brake M12 IF/IR	A96ZG00004	Wheel without brake M12 IF/IR
55	A96ZN00064	Contactor CN-6/4A 24 V IF/IR - SA300	A96ZN00064	Contactor CN-6/4A 24 V IF/IR - SA300
57	A96ZN00031	Emergency stop switch IF/IR	A96ZN00031	Emergency stop switch IF/IR
58	A96ZL00010	Reduction gear fixing ring IF/IR 17/22	A96ZL00010	Reduction gear fixing ring IF/IR 17/22
60	A86ME32014	Screw M8x40 TF÷TR	A86ME32014	Screw M8x40 TF÷TR
61	A96ZL00008	Gear box CM050 80 B14 1/30 FLS IF/R 17/22	A96ZL00008	Gear box CM050 80 B14 1/30 FLS IF/R 17/22
62	A86ME24118	Screw M5x10 TF÷TR	A86ME24118	Screw M5x10 TF÷TR
63	A96ZC00007	Back panel TF 17/22 (red)	A96ZC00007	Back panel TF 17/22 (red)
64	A96ZN00039	Transformer 380 V TF÷TF 2V÷TR÷TR 2V	A96ZN00039	Transformer 380 V TF÷TF 2V÷TR÷TR 2V

65	A96ZN00037	Main switch IF/IR	A96ZN00037	Main switch IF/IR
66	A96ZC00013	Front oblique switch panel IF 17/22	A96ZC00013	Front oblique switch panel IF 17/22
67	A96ZN00032	Starting button IF/IR	A96ZN00032	Starting button IF/IR
68	A96ZM00002	Timer 0-30 min. IF/IR	A96ZM00002	Timer 0-30 min. IF/IR
69	S14MT67001	Chain for Spiral 06B/86 TF÷TR 17	S14MT67006	Spiral Chain 06B/82 IF÷IR 22
70	A96ZH00010	Chain pinion gear z=29 06B IF/IR 17/22	A96ZH00010	Chain pinion gear z=29 06B IF/IR 17/22
71	A96ZI00024	Transmission shaft base UCF 204 IF 17/22 - IR 17/22	A96ZI00024	Transmission shaft base UCF 204 IF 17/22 - IR 17/22
72	A86ME26027	S.steel washer Ø 10 TF÷TR	A86ME26027	S.steel washer Ø 10 TF÷TR
73	A86ME26026	S.steel washer spring Ø 10 TF÷TR	A86ME26026	S.steel washer spring Ø 10 TF÷TR
74	A86ME24120	Screw M10x35 TF÷TR	A86ME24120	Screw M10x35 TF÷TR
76	A86ME36006	Key 6X6X30	A86ME36006	Key 6X6X30
81	A96ZH00008	Chain pinion gear z=14 06B TF/TR 17/22	A96ZH00008	Chain pinion gear z=14 06B TF/TR 17/22
83	A96ZI00030	Transmission shaft TF 17-22 "2008"	A96ZI00030	Transmission shaft TF 17-22 "2008"
84	A86ME36007	Key 8x7x35 TF÷TR	A86ME36007	Key 8x7x35 TF÷TR
86	A96ZN00030	Micro-switch IF	A96ZN00030	Micro-switch IF
93	S42PL00002	SPIRAL PLATE TF÷TR 17÷22	S42PL00002	SPIRAL PLATE TF÷TR 17÷22
94	A96ZD00003	O-ring diam. 20x2,5 IR	A96ZD00003	O-ring diam. 20x2,5 IR
97	A96ZN00053	Nylon block base IF/IR	A96ZN00053	Nylon block base IF/IR
98	A86ME25018	Nut M5 ZN	A86ME25018	Nut M5 ZN
99	A96ZN00052	Tensioner base IF/IR	A96ZN00052	Tensioner base IF/IR
100	A86ME24122	Screw TCEI M5x30 TF÷TR	A86ME24122	Screw TCEI M5x30 TF÷TR
101	A96ZN00054	Nylon block	A96ZN00054	Nylon block
105	A96ZV00027	Bowl chain tensioner part IF/IR 17/22	A96ZV00027	Bowl chain tensioner part IF/IR 17/22
106	A96ZN00060	Control card 115/230/400 V TF÷TF 2V÷TR÷TR 2V	A96ZN00060	Control card 115/230/400 V TF÷TF 2V÷TR÷TR 2V
116	A96ZF00002	Screw M8x100 TR	A96ZF00002	Screw M8x100 TR
123	A96ZF00013	Red frame IF/IR 17/22	A96ZF00013	Red frame IF/IR 17/22
POS.	**IFM17**	**DESCRIPTION**	**IFM22**	**DESCRIPTION**
28	A96ZN00047	Feed cable IFM/IRM	A96ZN00047	Feed cable IFM/IRM
44	A96ZJ00026	Motor 230 V - 0,9 kW - 50 Hz 80 B14 IFM/IRM 17/22	A96ZJ00026	Motor 230 V - 0,9 kW - 50 Hz 80 B14 IFM/IRM 17/22
65	A96ZN00043	Main switch IFM/IRM/IF VS/IR VS	A96ZN00043	Main switch IFM/IRM/IF VS/IR VS
POS.			**IF22 2V**	**DESCRIPTION**
44			A96ZJ00043	Motor YS80B14 4-6 Poles/550-370W/1440-960RPM 400V 50HZ - IF÷IR 17÷22 2V
53			A96ZO00009	Control box IFE/IRE
61			A96ZL00023	Gear box TCM050I 20/80 B14 IF÷IR 17÷22 2V
65			A96ZN00038	Main switch IF/IR 2V
66			A96ZC00030	Control panel black with flag IF÷IR 2V
67			A96ZN00089	Complete black/white switch IF-IR 17/22/33/42/53

POS.	IF33	DESCRIPTION	IF42	DESCRIPTION
1	A96ZE00009	Safety guard IF/IR 33	A96ZE00010	Safety guard IF/IR 42
2	A96ZV00017	Bowl IF/IR 33	A96ZV00018	Bowl IF/IR 42
5	A96ZD00001	Snap ring diam. 25 IF/IR	A96ZD00001	Snap ring diam. 25 IF/IR
6	A89CK00010	Bearing 6205-2RS TF÷TR	A89CK00010	Bearing 6205-2RS TF÷TR
7	A96ZV00025	Support bowl base IF/IR 17/22/33/42/53	A96ZV00025	Support bowl base IF/IR 17/22/33/42/53
8	S14MT67008	Bowl spiral 06B/144 TF÷TR 33÷42÷53	S14MT67008	Bowl spiral 06B/144 TF÷TR 33÷42÷53
9	A96ZR00005	Crown z=85 06B IF/IR 33/42/53	A96ZR00005	Crown z=85 06B IF/IR 33/42/53
10	A96ZI00013	Bowl support axle IF/IR 17/22/33/42/53	A96ZI00013	Bowl support axle IF/IR 17/22/33/42/53
11	A86ME24115	Screw M8x35 TF÷TR	A86ME24115	Screw M8x35 TF÷TR
13	S63FS67001	Safety guard pin TF/TR 33/42/53	S63FS67001	Safety guard pin TF/TR 33/42/53
14	A96ZE00012	Cam for safety guard IF	A96ZE00012	Cam for safety guard IF
15	A86ME32013	Screw M8x10 TF÷TR	A86ME32013	Screw M8x10 TF÷TR
16	A86ME24116	Screw M8x25 TF÷TR	A86ME24116	Screw M8x25 TF÷TR
17	A86ME26024	S.steel washer grover Ø 8,5 TF÷TR	A86ME26024	S.steel washer grover Ø 8,5 TF÷TR
18	A86ME26025	S.Steel washer Ø8 TF÷TR	A86ME26025	S.Steel washer Ø8 TF÷TR
19	A96ZH00007	Pinion gear z=15 08B IF/IR 33/42/53	A96ZH00007	Pinion gear z=15 08B IF/IR 33/42/53
20	A96ZS00007	Spiral support IF/IR 33/42/53	A96ZS00007	Spiral support IF/IR 33/42/53
21	A86ME24114	Screw M8x30	A86ME24114	Screw M8x30
22	A89CK00010	Bearing 6205-2RS TF÷TR	A89CK00010	Bearing 6205-2RS TF÷TR
22.01	A89CK00011	Bearing 6006-2RS IF÷IR 33÷42÷53	A89CK00011	Bearing 6006-2RS IF÷IR 33÷42÷53
23	A86ME36009	Key 6x6x35 TF÷TR 33÷42÷53	A86ME36009	Key 6x6x35 TF÷TR 33÷42÷53
24	A96ZI00016	Axle for spiral base IF/IR 33/42/53	A96ZI00016	Axle for spiral base IF/IR 33/42/53
25	A96ZS00005	Spiral IF/IR 33/42/53	A96ZS00005	Spiral IF/IR 33/42/53
27	A96ZN00025	Wire clip IF/IR	A96ZN00025	Wire clip IF/IR
28	A96ZN00026	Supply wire IF/IR 17/22/33/42/53	A96ZN00026	Supply wire IF/IR 17/22/33/42/53
33	A96ZA00002	Rod breaking dough IF/IR 33	A96ZA00003	Rod breaking dough IF/IR 42
34	A86ME24117	Screw M10x25 TF÷TR	A86ME24117	Screw M10x25 TF÷TR
39	A96ZB00007	Side safety panel IF 33	A96ZB00007	Side safety panel IF 33
41	A96ZF00011	Steel Foot M12 IF/IR	A96ZF00011	Steel Foot M12 IF/IR
42	A96ZF00019	Insert for plastic foot IF/IR	A96ZF00019	Insert for plastic foot IF/IR
43	A96ZG00003	Wheel with brake M12 IF/IR	A96ZG00003	Wheel with brake M12 IF/IR
44	A96ZJ00024	Motor 400 V -1,5 kW - 50 Hz 90 B14 IF/IR 33/42/53 + IF/IR 33/42/53VS	A96ZJ00024	Motor 400 V -1,5 kW - 50 Hz 90 B14 IF/IR 33/42/53 + IF/IR 33/42/53VS
45	A96ZC00004	Cover IF/IR 33/42/53 (red)	A96ZC00004	Cover IF/IR 33/42/53 (red)
47	A96ZD00002	Ring in nylon IF/IR	A96ZD00002	Ring in nylon IF/IR
48	A86ME24119	Screw M4x30 TF÷TR	A86ME24119	Screw M4x30 TF÷TR
52	A96ZF00007	Axis cover IR	A96ZF00007	Axis cover IR
54	A96ZG00004	Wheel without brake M12 IF/IR	A96ZG00004	Wheel without brake M12 IF/IR
55	A96ZN00064	Contactor CN-6/4A 24 V IF/IR - SA300	A96ZN00064	Contactor CN-6/4A 24 V IF/IR - SA300
57	A96ZN00031	Emergency stop switch IF/IR	A96ZN00031	Emergency stop switch IF/IR
58	A96ZL00018	Flange fixing gear box TF÷TR 33	A96ZL00011	Ring fixing reduction gear IF/IR 33/42/53
60	A86ME32014	Screw M8x40 TF÷TR	A86ME32014	Screw M8x40 TF÷TR
61	A96ZL00015	Gear box CM63 90 B14 1/30 FLS IF/IR 33/42/53	A96ZL00015	Gear box CM63 90 B14 1/30 FLS IF/IR 33/42/53
62	A86ME24118	Screw M5x10 TF÷TR	A86ME24118	Screw M5x10 TF÷TR
63	A96ZC00008	Back panel IF 33/42/53 (red)	A96ZC00008	Back panel IF 33/42/53 (red)

64	A96ZN00039	Transformer 380 V TF÷TF 2V÷TR÷TR 2V	A96ZN00039	Transformer 380 V TF÷TF 2V÷TR÷TR 2V
65	A96ZN00037	Main switch IF/IR	A96ZN00037	Main switch IF/IR
66	A96ZC00014	Front oblique switch panel IF 33/42/53	A96ZC00014	Front oblique switch panel IF 33/42/53
67	A96ZN00032	Starting button IF/IR	A96ZN00032	Starting button IF/IR
68	A96ZM00002	Timer 0-30 min. IF/IR	A96ZM00002	Timer 0-30 min. IF/IR
69	S14MT67002	Chain 06B/73 TF÷TR 33	S14MT67003	Spiral chain 08B/69 TF÷TR 42
70	A96ZH00011	Chain pinion gear z=29 08B IF/IR 33/42/53	A96ZH00011	Chain pinion gear z=29 08B IF/IR 33/42/53
71	A96ZI00025	Transmission shaft base UCF 205 IF 33/42/53 - IR 33/42/53	A96ZI00025	Transmission shaft base UCF 205 IF 33/42/53 - IR 33/42/53
72	A86ME26027	S.steel washer Ø 10 TF÷TR	A86ME26027	S.steel washer Ø 10 TF÷TR
73	A86ME26026	S.steel washer spring Ø 10 TF÷TR	A86ME26026	S.steel washer spring Ø 10 TF÷TR
74	A86ME24120	Screw M10x35 TF÷TR	A86ME24120	Screw M10x35 TF÷TR
76	A86ME36006	Key 6X6X30	A86ME36006	Key 6X6X30
81	A96ZH00009	Chain pinion gear z=16 06B IF/IR 33/42/53 + VS	A96ZH00009	Chain pinion gear z=16 06B IF/IR 33/42/53 + VS
83	S63TR67002	Transmissione shaft IF33	A96ZI00031	Transmission shaft IF 42/53
84	A86ME36007	Key 8x7x35 TF÷TR	A86ME36007	Key 8x7x35 TF÷TR
86	A96ZN00030	Micro-switch IF	A96ZN00030	Micro-switch IF
93	A96ZS00009	SPIRAL PLATE TF÷TR 33÷42÷53	A96ZS00009	SPIRAL PLATE TF÷TR 33÷42÷53
94	A96ZD00003	O-ring diam. 20x2,5 IR	A96ZD00003	O-ring diam. 20x2,5 IR
97	A96ZN00053	Nylon block base IF/IR	A96ZN00053	Nylon block base IF/IR
98	A86ME25018	Nut M5 ZN	A86ME25018	Nut M5 ZN
99	A96ZN00052	Tensioner base IF/IR	A96ZN00052	Tensioner base IF/IR
100	A86ME24122	Screw TCEI M5x30 TF÷TR	A86ME24122	Screw TCEI M5x30 TF÷TR
101	A96ZN00054	Nylon block	A96ZN00054	Nylon block
105	A96ZV00027	Bowl chain tensioner part IF/IR 17/22	A96ZV00028	Bowl chain tensioner part IF/IR 33/42/53
106	A96ZN00060	Control card 115/230/400 V TF÷TF 2V÷TR÷TR 2V	A96ZN00060	Control card 115/230/400 V TF÷TF 2V÷TR÷TR 2V
116	A96ZF00002	Screw M8x100 TR	A96ZF00002	Screw M8x100 TR
123	A96ZF00014	Red frame IF/IR 33/42/53	A96ZF00014	Red frame IF/IR 33/42/53

POS.	**IFM33**	**DESCRIPTION**	**IFM42**	**DESCRIPTION**
28	A96ZN00047	Feed cable IFM/IRM	A96ZN00047	Feed cable IFM/IRM
44	A96ZJ00039	Motor 230 V - 1,3 kW - 50 Hz 80 B14 IFM/IRM 33	-	
65	A96ZN00043	Main switch IFM/IRM/IF VS/IR VS	A96ZN00043	Main switch IFM/IRM/IF VS/IR VS

POS.	**IF33 2V**	**DESCRIPTION**	**IF42 2V**	**DESCRIPTION**
44	A96ZJ00044	Motor YS90B14 4-6 Poles/1100-800W/1440-960RPM 400V 50HZ - IF÷IR 33÷42÷53 2V	A96ZJ00044	Motor YS90B14 4-6 Poles/1100-800W/1440-960RPM 400V 50HZ - IF÷IR 33÷42÷53 2V
53	A96ZO00009	Control box IFE/IRE	A96ZO00009	Control box IFE/IRE
61	A96ZL00024	Gear box TCM063I 20/90 B14 IF÷IR 33÷42÷53 2V	A96ZL00024	Gear box TCM063I 20/90 B14 IF÷IR 33÷42÷53 2V
65	A96ZN00038	Main switch IF/IR 2V	A96ZN00038	Main switch IF/IR 2V
66	A96ZC00030	Control panel black with flag IF÷IR 2V	A96ZC00030	Control panel black with flag IF÷IR 2V
67	A96ZN00089	Complete black/white switch IF-IR 17/22/33/42/53	A96ZN00089	Complete black/white switch IF-IR 17/22/33/42/53

POS.	IF53	DESCRIPTION
1	A96ZE00011	Safety guard IF/IR 53
2	A96ZV00019	Bowl IF/IR 53
5	A96ZD00001	Snap ring diam. 25 IF/IR
6	A89CK00010	Bearing 6205-2RS TF÷TR
7	A96ZV00025	Support bowl base IF/IR 17/22/33/42/53
8	S14MT67008	Bowl spiral 06B/144 TF÷TR 33÷42÷53
9	A96ZR00005	Crown z=85 06B IF/IR 33/42/53
10	A96ZI00013	Bowl support axle IF/IR 17/22/33/42/53
11	A86ME24115	Screw M8x35 TF÷TR
13	S63FS67001	Safety guard pin TF/TR 33/42/53
14	A96ZE00012	Cam for safety guard IF
15	A86ME32013	Screw M8x10 TF÷TR
16	A86ME24116	Screw M8x25 TF÷TR
17	A86ME26024	S.steel washer grover Ø 8,5 TF÷TR
18	A86ME26025	S.Steel washer Ø8 TF÷TR
19	A96ZH00007	Pinion gear z=15 08B IF/IR 33/42/53
20	A96ZS00007	Spiral support IF/IR 33/42/53
21	A86ME24114	Screw M8x30
22	A89CK00010	Bearing 6205-2RS TF÷TR
22.01	A89CK00011	Bearing 6006-2RS IF÷IR 33÷42÷53
23	A86ME36009	Key 6x6x35 TF÷TR 33÷42÷53
24	A96ZI00016	Axle for spiral base IF/IR 33/42/53
25	A96ZS00017	Spiral IF÷IR 53
27	A96ZN00025	Wire clip IF/IR
28	A96ZN00026	Supply wire IF/IR 17/22/33/42/53
33	A96ZA00004	Rod breaking dough IF/IR 53
34	A86ME24117	Screw M10x25 TF÷TR
39	A96ZB00007	Side safety panel IF 33
41	A96ZF00011	Steel Foot M12 IF/IR
42	A96ZF00019	Insert for plastic foot IF/IR
43	A96ZG00003	Wheel with brake M12 IF/IR
44	A96ZJ00024	Motor 400 V -1,5 kW - 50 Hz 90 B14 IF/IR 33/42/53 + IF/IR 33/42/53VS
45	A96ZC00004	Cover IF/IR 33/42/53 (red)
47	A96ZD00002	Ring in nylon IF/IR
48	A86ME24119	Screw M4x30 TF÷TR
52	A96ZF00007	Axis cover IR
54	A96ZG00004	Wheel without brake M12 IF/IR
55	A96ZN00064	Contactor CN-6/4A 24 V IF/IR - SA300
57	A96ZN00031	Emergency stop switch IF/IR
58	A96ZL00011	Ring fixing reduction gear IF/IR 33/42/53
60	A86ME32014	Screw M8x40 TF÷TR
61	A96ZL00015	Gear box CM63 90 B14 1/30 FLS IF/IR 33/42/53
62	A86ME24118	Screw M5x10 TF÷TR
63	A96ZC00008	Back panel IF 33/42/53 (red)
64	A96ZN00039	Transformer 380 V TF÷TF 2V÷TR÷TR 2V
65	A96ZN00037	Main switch IF/IR
66	A96ZC00014	Front oblique switch panel IF 33/42/53
67	A96ZN00032	Starting button IF/IR
68	A96ZM00002	Timer 0-30 min. IF/IR
69	S14MT67017	Spiral chain 08B/69 IF÷IR 53 2013
70	A96ZH00011	Chain pinion gear z=29 08B IF/IR 33/42/53
71	A96ZI00025	Transmission shaft base UCF 205 IF 33/42/53 - IR 33/42/53
72	A86ME26027	S.steel washer Ø 10 TF÷TR

73	A86ME26026	S.steel washer spring Ø 10 TF÷TR
74	A86ME24120	Screw M10x35 TF÷TR
76	A86ME36006	Key 6X6X30
81	A96ZH00009	Chain pinion gear z=16 06B IF/IR 33/42/53 + VS
83	A96ZI00031	Transmission shaft IF 42/53
84	A86ME36007	Key 8x7x35 TF÷TR
86	A96ZN00030	Micro-switch IF
93	A96ZS00009	SPIRAL PLATE TF÷TR 33÷42÷53
94	A96ZD00003	O-ring diam. 20x2,5 IR
97	A96ZN00053	Nylon block base IF/IR
98	A86ME25018	Nut M5 ZN
99	A96ZN00052	Tensioner base IF/IR
100	A86ME24122	Screw TCEI M5x30 TF÷TR
101	A96ZN00054	Nylon block
105	A96ZV00028	Bowl chain tensioner part IF/IR 33/42/53
106	A96ZN00060	Control card 115/230/400 V TF÷TF 2V÷TR÷TR 2V
116	A96ZF00002	Screw M8x100 TR
123	A96ZF00014	Red frame IF/IR 33/42/53
POS.	**IFM53**	**DESCRIPTION**
28	A96ZN00047	Feed cable IFM/IRM
65	A96ZN00043	Main switch IFM/IRM/IF VS/IR VS
POS.	**IF53 2V**	**DESCRIPTION**
44	A96ZJ00044	Motor YS90B14 4-6 Poles/1100-800W/1440-960RPM 400V 50HZ - IF÷IR 33÷42÷53 2V
53	A96ZO00009	Control box IFE/IRE
61	A96ZL00024	Gear box TCM063I 20/90 B14 IF÷IR 33÷42÷53 2V
65	A96ZN00038	Main switch IF/IR 2V
66	A96ZC00030	Control panel black with flag IF÷IR 2V
67	A96ZN00089	Complete black/white switch IF-IR 17/22/33/42/53

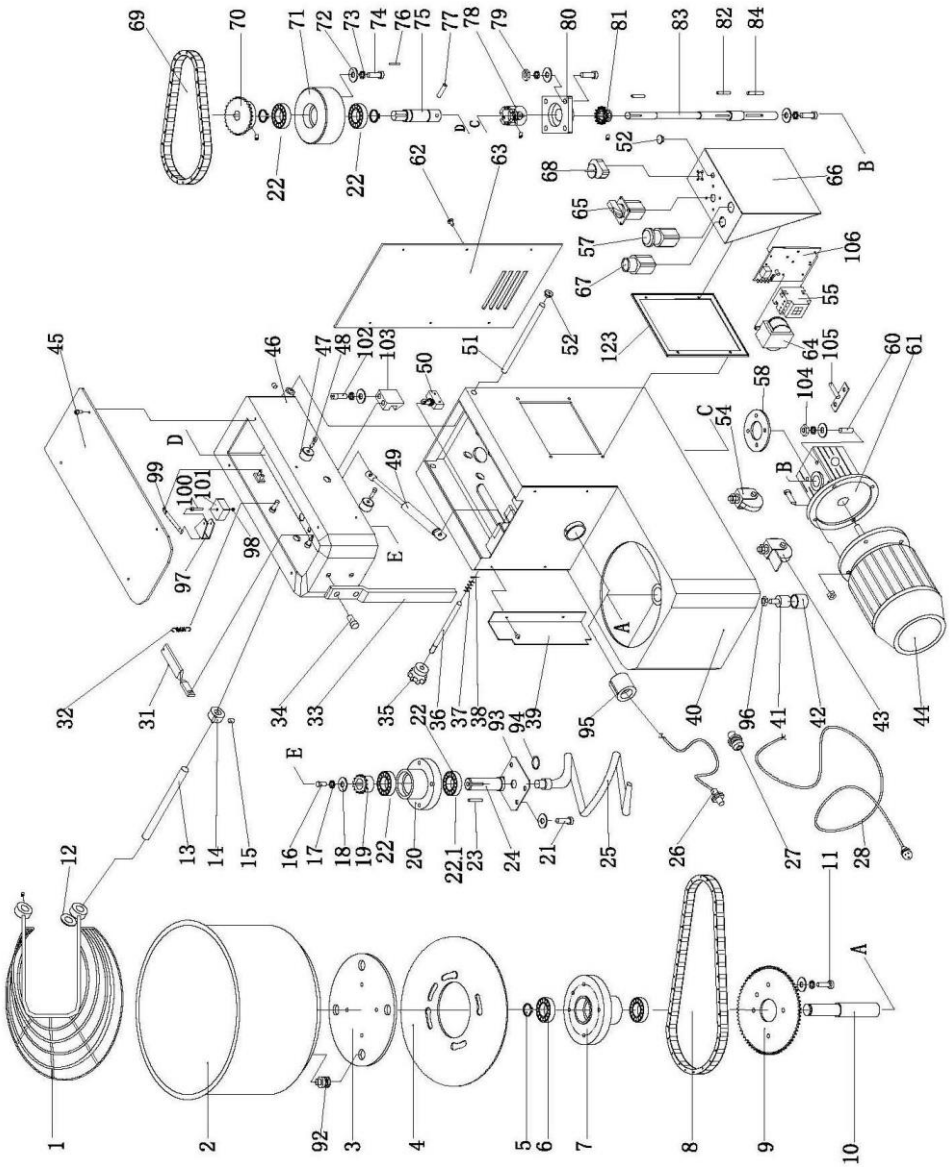

IR - IRM

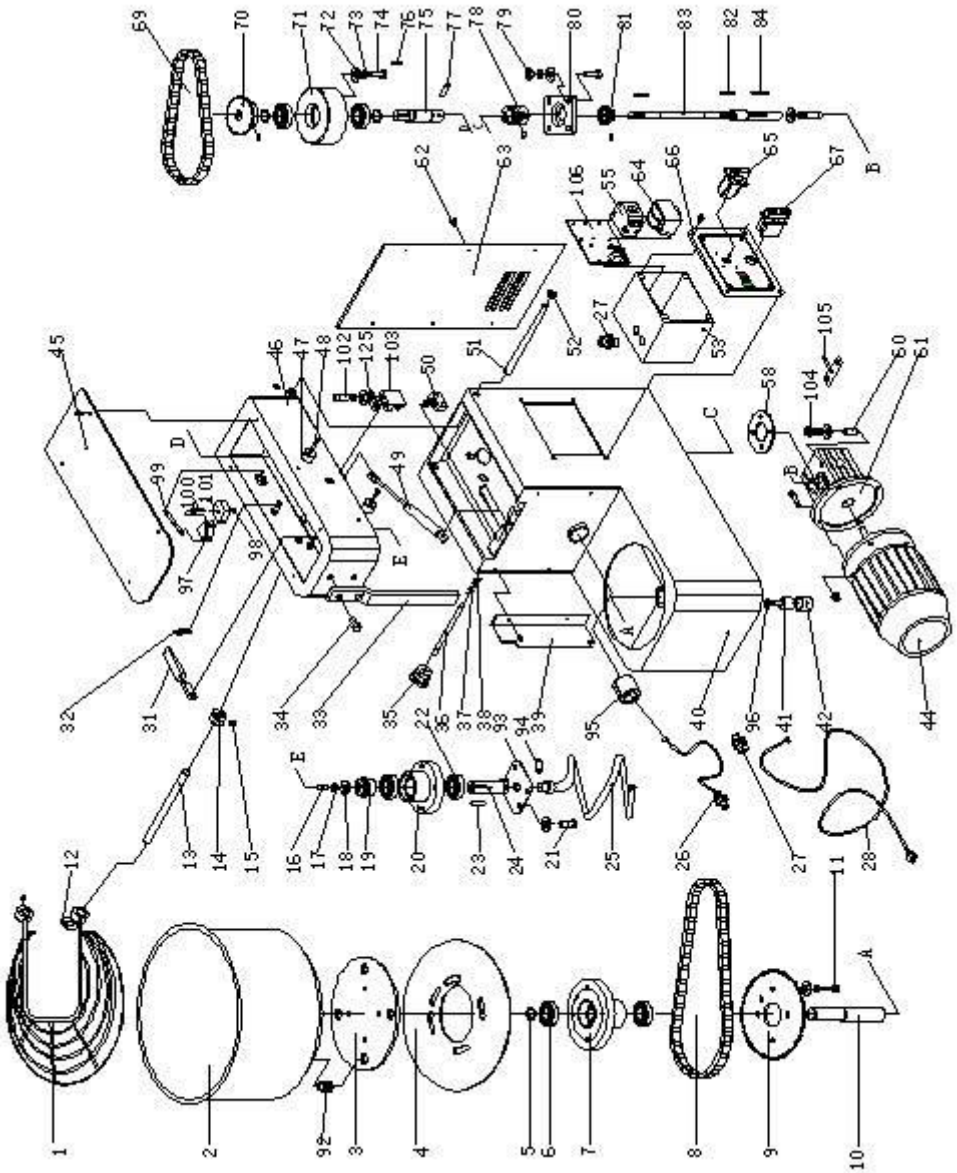

IR 2V

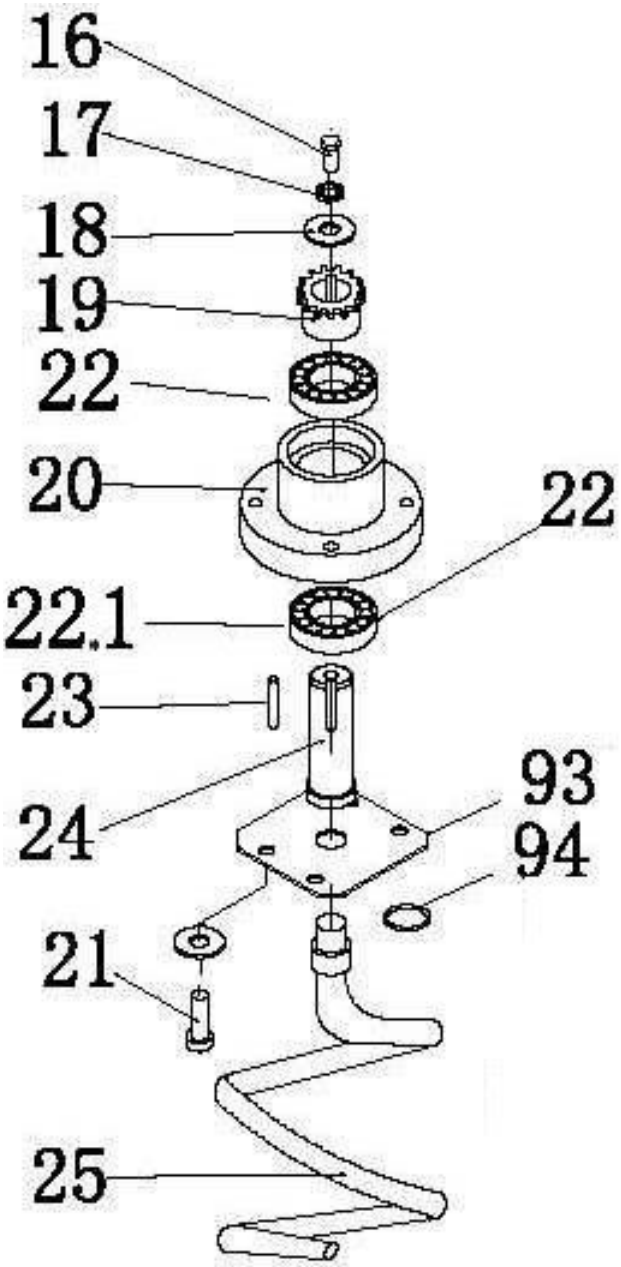

IR – IRM – IR 2V

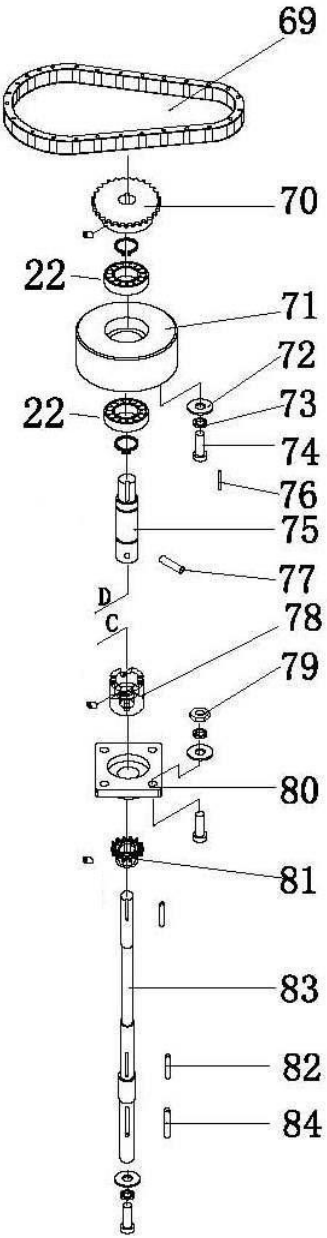

IR – IRM – IR 2V

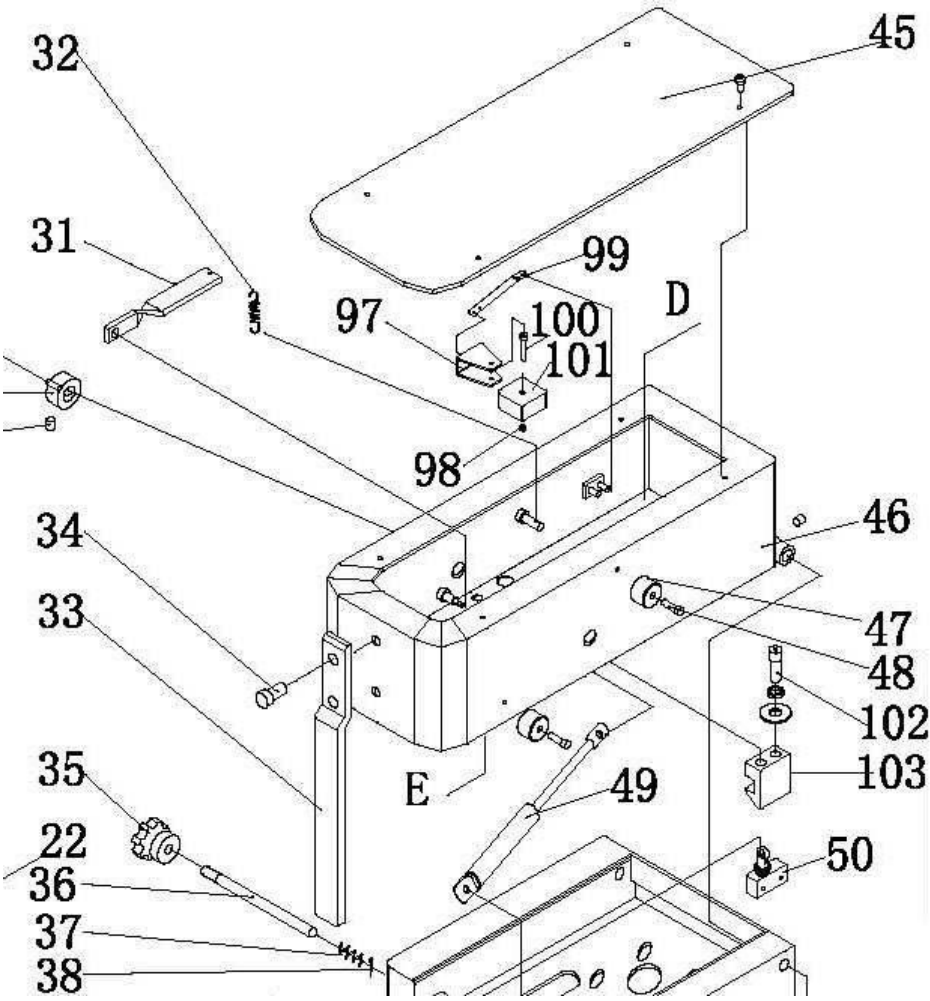
32
45
31
99
97
100
D
101
98
46
34
47
33
48
102
35
E
49
103
22
50
36
37
38

IR – IRM – IR 2V

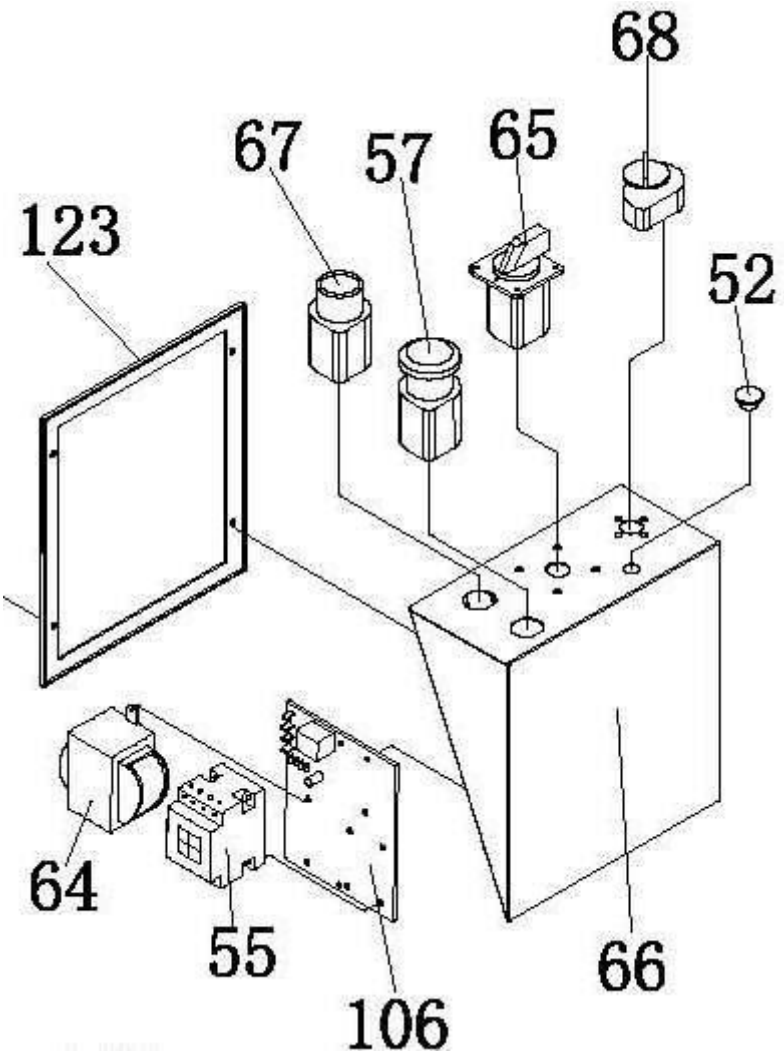

IF-IFM ÷ IR-IRM

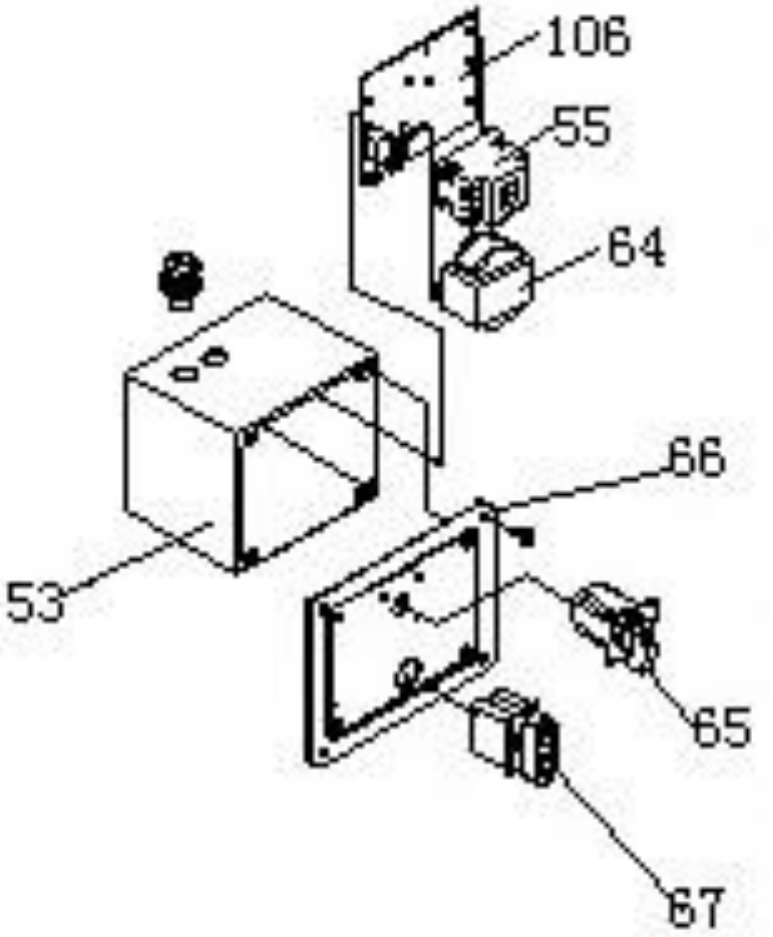

IF 2V-IR 2V

POS.	IR17	DESCRIPTION	IR22	DESCRIPTION
1	A96ZE00007	Safety guard IF/IR 17	A96ZE00008	Safety guard IF/IR 22
2	A96ZV00015	Bowl IF/IR 17	A96ZV00016	Bowl IF/IR 22
3	A96ZV00020	Bowl flange IR	A96ZV00020	Bowl flange IR
4	A96ZV00021	Bowl blocking plate IR 17	A96ZV00026	Plate block bowl IR 22
5	A96ZD00001	Snap ring diam. 25 IF/IR	A96ZD00001	Snap ring diam. 25 IF/IR
6	A89CK00010	Bearing 6205-2RS TF÷TR	A89CK00010	Bearing 6205-2RS TF÷TR
7	A96ZV00025	Support bowl base IF/IR 17/22/33/42/53	A96ZV00025	Support bowl base IF/IR 17/22/33/42/53
8	S14MT67007	Bowl chain 06B/126 IF÷IR 17÷22	S14MT67007	Bowl chain 06B/126 IF÷IR 17÷22
9	A96ZR00004	Crown z=72 06B IF/IR 17/22	A96ZR00004	Crown z=72 06B IF/IR 17/22
10	A96ZI00013	Bowl support axle IF/IR 17/22/33/42/53	A96ZI00013	Bowl support axle IF/IR 17/22/33/42/53
11	A86ME24121	Screw M8x60 TF	A86ME24121	Screw M8x60 TF
12	A96ZE00013	Guard ring IR	A96ZE00013	Guard ring IR
13	A96ZI00014	Safety guard pin IF/IR 17/22	A96ZI00014	Safety guard pin IF/IR 17/22
14	A96ZE00014	Cam for safety guard IR	A96ZE00014	Cam for safety guard IR
15	A86ME32013	Screw M8x10 TF÷TR	A86ME32013	Screw M8x10 TF÷TR
16	A86ME24116	Screw M8x25 TF÷TR	A86ME24116	Screw M8x25 TF÷TR
17	A86ME26024	S.steel washer grover Ø 8,5 TF÷TR	A86ME26024	S.steel washer grover Ø 8,5 TF÷TR
18	A86ME26025	S.Steel washer Ø8 TF÷TR	A86ME26025	S.Steel washer Ø8 TF÷TR
19	A96ZH00006	Pinion gear z=15 06B IF/IR 17/22	A96ZH00006	Pinion gear z=15 06B IF/IR 17/22
20	A96ZS00006	Spiral support IF/IF 17/22	A96ZS00006	Spiral support IF/IF 17/22
21	A86ME24114	Screw M8x30	A86ME24114	Screw M8x30
22	A89CK00010	Bearing 6205-2RS TF÷TR	A89CK00010	Bearing 6205-2RS TF÷TR
22.01	A89CK00010	Bearing 6205-2RS TF÷TR	A89CK00010	Bearing 6205-2RS TF÷TR
23	A86ME36008	Key 6x6x20 TF÷TR 17÷22	A86ME36008	Key 6x6x20 TF÷TR 17÷22
24	A96ZI00015	Axle for spiral base IF/IR 17/22	A96ZI00015	Axle for spiral base IF/IR 17/22
25	A96ZS00004	Spiral IF/IR 17/22	A96ZS00004	Spiral IF/IR 17/22
26	A96ZN00024	Distance sensor with two cables "NO" IR/IR 2V	A96ZN00024	Distance sensor with two cables "NO" IR/IR 2V
27	A96ZN00025	Wire clip IF/IR	A96ZN00025	Wire clip IF/IR
28	A96ZN00026	Supply wire IF/IR 17/22/33/42/53	A96ZN00026	Supply wire IF/IR 17/22/33/42/53
31	A96ZF00003	Pivot for fixing spring IR	A96ZF00003	Pivot for fixing spring IR
32	A86ME30008	Spring diam. 1,2 x diam. 8,5 x 20/13 IR	A86ME30008	Spring diam. 1,2 x diam. 8,5 x 20/13 IR
33	A96ZA00001	Dough breaking rod IF/IR 17	A96ZA00001	Dough breaking rod IF/IR 17
34	A86ME24117	Screw M10x25 TF÷TR	A86ME24117	Screw M10x25 TF÷TR
35	A96ZF00008	Head closing knob IR	A96ZF00008	Head closing knob IR
36	A96ZI00028	Head closing shaft IR 17/22	A96ZI00028	Head closing shaft IR 17/22
37	A96ZN00036	Spring Ø 1,5 x Ø 14 x 30/6 IR	A96ZN00036	Spring Ø 1,5 x Ø 14 x 30/6 IR
38	A96ZF00009	Pin diam. 3,2 IR	A96ZF00009	Pin diam. 3,2 IR
39	A96ZB00001	Side safety panel IR 17	A96ZB00008	Side safety panel IR 22
41	A96ZF00011	Steel Foot M12 IF/IR	A96ZF00011	Steel Foot M12 IF/IR
42	A96ZF00019	Insert for plastic foot IF/IR	A96ZF00019	Insert for plastic foot IF/IR
43	A96ZG00003	Wheel with brake M12 IF/IR	A96ZG00003	Wheel with brake M12 IF/IR
44	A87MR56010	Motor 400 V - 0,75 kW - 50 Hz 80 B14 IF/IR17/22 + IF/IR17/22 VS PF30-33	A87MR56010	Motor 400 V - 0,75 kW - 50 Hz 80 B14 IF/IR17/22 + IF/IR17/22 VS PF30-33
45	A96ZC00002	Cover IF/IR 17/22 (red)	A96ZC00002	Cover IF/IR 17/22 (red)
47	A96ZD00002	Ring in nylon IF/IR	A96ZD00002	Ring in nylon IF/IR
48	A86ME24119	Screw M4x30 TF÷TR	A86ME24119	Screw M4x30 TF÷TR
49	A96ZF00018	Gas spring IR	A96ZF00018	Gas spring IR

50	A96ZN00042	Micro-switch IR	A96ZN00042	Micro-switch IR
51	A96ZI00026	Head rotation shaft IR 17/22	A96ZI00026	Head rotation shaft IR 17/22
52	A96ZF00007	Axis cover IR	A96ZF00007	Axis cover IR
54	A96ZG00004	Wheel without brake M12 IF/IR	A96ZG00004	Wheel without brake M12 IF/IR
55	A96ZN00064	Contactor CN-6/4A 24 V IF/IR - SA300	A96ZN00064	Contactor CN-6/4A 24 V IF/IR - SA300
57	A96ZN00031	Emergency stop switch IF/IR	A96ZN00031	Emergency stop switch IF/IR
58	A96ZL00010	Reduction gear fixing ring IF/IR 17/22	A96ZL00010	Reduction gear fixing ring IF/IR 17/22
60	A86ME32014	Screw M8x40 TF÷TR	A86ME32014	Screw M8x40 TF÷TR
61	A96ZL00008	Gear box CM050 80 B14 1/30 FLS IF/R 17/22	A96ZL00008	Gear box CM050 80 B14 1/30 FLS IF/R 17/22
62	A86ME24118	Screw M5x10 TF÷TR	A86ME24118	Screw M5x10 TF÷TR
63	S40PS67003	Back panel TR 17÷22 (red colour)	S40PS67003	Back panel TR 17÷22 (red colour)
64	A96ZN00039	Transformer 380 V TF÷TF 2V÷TR÷TR 2V	A96ZN00039	Transformer 380 V TF÷TF 2V÷TR÷TR 2V
65	A96ZN00037	Main switch IF/IR	A96ZN00037	Main switch IF/IR
66	A96ZC00013	Front oblique switch panel IF 17/22	A96ZC00013	Front oblique switch panel IF 17/22
67	A96ZN00032	Starting button IF/IR	A96ZN00032	Starting button IF/IR
68	A96ZM00002	Timer 0-30 min. IF/IR	A96ZM00002	Timer 0-30 min. IF/IR
69	S14MT67001	Chain for Spiral 06B/86 TF÷TR 17	S14MT67006	Spiral Chain 06B/82 IF÷IR 22
70	A96ZH00010	Chain pinion gear z=29 06B IF/IR 17/22	A96ZH00010	Chain pinion gear z=29 06B IF/IR 17/22
71	A96ZN00028	Ball bearing base IR 17/22	A96ZN00028	Ball bearing base IR 17/22
72	A86ME26027	S.steel washer Ø 10 TF÷TR	A86ME26027	S.steel washer Ø 10 TF÷TR
73	A86ME26026	S.steel washer spring Ø 10 TF÷TR	A86ME26026	S.steel washer spring Ø 10 TF÷TR
74	A86ME24125	Screw TE M10x35 INOX TF÷TR	A86ME24125	Screw TE M10x35 INOX TF÷TR
75	A96ZI00020	Connecting shaft IR 17/22	A96ZI00020	Connecting shaft IR 17/22
76	A86ME36006	Key 6X6X30	A86ME36006	Key 6X6X30
77	A96ZN00027	Connecting pin Ø 10x50 IR	A96ZN00027	Connecting pin Ø 10x50 IR
78	A96ZT00001	Transmission coupling IR 17/22	A96ZT00001	Transmission coupling IR 17/22
79	A86ME25024	Nut M10 ZN	A86ME25024	Nut M10 ZN
80	A96ZI00024	Transmission shaft base UCF 204 IF 17/22 - IR 17/22	A96ZI00024	Transmission shaft base UCF 204 IF 17/22 - IR 17/22
81	A96ZH00008	Chain pinion gear z=14 06B TF/TR 17/22	A96ZH00008	Chain pinion gear z=14 06B TF/TR 17/22
82	A86ME36006	Key 6X6X30	A86ME36006	Key 6X6X30
83	A96ZI00017	Transmission shaft IR 17/22	A96ZI00017	Transmission shaft IR 17/22
84	A86ME36007	Key 8x7x35 TF÷TR	A86ME36007	Key 8x7x35 TF÷TR
92	S69IV67001	Bowls peg TR	S69IV67001	Bowls peg TR
93	S42PL00002	SPIRAL PLATE TF÷TR 17÷22	S42PL00002	SPIRAL PLATE TF÷TR 17÷22
94	A96ZD00003	O-ring diam. 20x2,5 IR	A96ZD00003	O-ring diam. 20x2,5 IR
95	A96ZN00057	Proximity micro L=45 mm TR 17÷22	A96ZN00057	Proximity micro L=45 mm TR 17÷22
96	A86ME25026	Nut M12 ZN	A86ME25026	Nut M12 ZN
97	A96ZN00053	Nylon block base IF/IR	A96ZN00053	Nylon block base IF/IR
98	A86ME25018	Nut M5 ZN	A86ME25018	Nut M5 ZN
99	A96ZN00052	Tensioner base IF/IR	A96ZN00052	Tensioner base IF/IR
100	A86ME24122	Screw TCEI M5x30 TF÷TR	A86ME24122	Screw TCEI M5x30 TF÷TR
101	A96ZN00054	Nylon block	A96ZN00054	Nylon block
102	A86ME24124	Screw TCEI M10x25 TR	A86ME24124	Screw TCEI M10x25 TR
103	A96ZF00012	Head closing hook	A96ZF00012	Head closing hook

104	A86ME25019	Nut M8 ZN	A86ME25019	Nut M8 ZN
105	A96ZV00027	Bowl chain tensioner part IF/IR 17/22	A96ZV00027	Bowl chain tensioner part IF/IR 17/22
106	A96ZN00060	Control card 115/230/400 V TF÷TF 2V÷TR÷TR 2V	A96ZN00060	Control card 115/230/400 V TF÷TF 2V÷TR÷TR 2V
123	A96ZF00013	Red frame IF/IR 17/22	A96ZF00013	Red frame IF/IR 17/22
POS.	**IRM17**	**DESCRIPTION**	**IRM22**	**DESCRIPTION**
28	A96ZN00047	Feed cable IFM/IRM	A96ZN00047	Feed cable IFM/IRM
44	A96ZJ00026	Motor 230 V - 0,9 kW - 50 Hz 80 B14 IFM/IRM 17/22	A96ZJ00026	Motor 230 V - 0,9 kW - 50 Hz 80 B14 IFM/IRM 17/22
65	A96ZN00043	Main switch IFM/IRM/IF VS/IR VS	A96ZN00043	Main switch IFM/IRM/IF VS/IR VS
POS.			**IF22 2V**	**DESCRIPTION**
44			A96ZJ00043	Motor YS80B14 4-6 Poles/550-370W/1440-960RPM 400V 50HZ - IF÷IR 17÷22 2V
53			A96ZO00009	Control box IFE/IRE
61			A96ZL00023	Gear box TCM050I 20/80 B14 IF÷IR 17÷22 2V
65			A96ZN00038	Main switch IF/IR 2V
66			A96ZC00030	Control panel black with flag IF÷IR 2V
67			A96ZN00089	Complete black/white switch IF-IR 17/22/33/42/53

POS.	IR33	DESCRIPTION	IR42	DESCRIPTION
1	A96ZE00009	Safety guard IF/IR 33	A96ZE00010	Safety guard IF/IR 42
2	A96ZV00017	Bowl IF/IR 33	A96ZV00018	Bowl IF/IR 42
3	A96ZV00020	Bowl flange IR	A96ZV00020	Bowl flange IR
4	A96ZV00022	Plate block bowl IR 33	A96ZV00023	Plate block bowl IR 42
5	A96ZD00001	Snap ring diam. 25 IF/IR	A96ZD00001	Snap ring diam. 25 IF/IR
6	A89CK00010	Bearing 6205-2RS TF÷TR	A89CK00010	Bearing 6205-2RS TF÷TR
7	A96ZV00025	Support bowl base IF/IR 17/22/33/42/53	A96ZV00025	Support bowl base IF/IR 17/22/33/42/53
8	S14MT67008	Bowl spiral 06B/144 TF÷TR 33÷42÷53	S14MT67008	Bowl spiral 06B/144 TF÷TR 33÷42÷53
9	A96ZR00005	Crown z=85 06B IF/IR 33/42/53	A96ZR00005	Crown z=85 06B IF/IR 33/42/53
10	A96ZI00013	Bowl support axle IF/IR 17/22/33/42/53	A96ZI00013	Bowl support axle IF/IR 17/22/33/42/53
11	A86ME24121	Screw M8x60 TF	A86ME24121	Screw M8x60 TF
12	A96ZE00013	Guard ring IR	A96ZE00013	Guard ring IR
13	S63FS67001	Safety guard pin TF/TR 33/42/53	S63FS67001	Safety guard pin TF/TR 33/42/53
14	A96ZE00014	Cam for safety guard IR	A96ZE00014	Cam for safety guard IR
15	A86ME32013	Screw M8x10 TF÷TR	A86ME32013	Screw M8x10 TF÷TR
16	A86ME24116	Screw M8x25 TF÷TR	A86ME24116	Screw M8x25 TF÷TR
17	A86ME26024	S.steel washer grover Ø 8,5 TF÷TR	A86ME26024	S.steel washer grover Ø 8,5 TF÷TR
18	A86ME26025	S.Steel washer Ø8 TF÷TR	A86ME26025	S.Steel washer Ø8 TF÷TR
19	A96ZH00007	Pinion gear z=15 08B IF/IR 33/42/53	A96ZH00007	Pinion gear z=15 08B IF/IR 33/42/53
20	A96ZS00007	Spiral support IF/IR 33/42/53	A96ZS00007	Spiral support IF/IR 33/42/53
21	A86ME24114	Screw M8x30	A86ME24114	Screw M8x30
22	A89CK00010	Bearing 6205-2RS TF÷TR	A89CK00010	Bearing 6205-2RS TF÷TR
22.01	A89CK00011	Bearing 6006-2RS IF÷IR 33÷42÷53	A89CK00011	Bearing 6006-2RS IF÷IR 33÷42÷53
23	A86ME36009	Key 6x6x35 TF÷TR 33÷42÷53	A86ME36009	Key 6x6x35 TF÷TR 33÷42÷53
24	A96ZI00016	Axle for spiral base IF/IR 33/42/53	A96ZI00016	Axle for spiral base IF/IR 33/42/53
25	A96ZS00005	Spiral IF/IR 33/42/53	A96ZS00005	Spiral IF/IR 33/42/53
26	A96ZN00024	Distance sensor with two cables "NO" IR/IR 2V	A96ZN00024	Distance sensor with two cables "NO" IR/IR 2V
27	A96ZN00025	Wire clip IF/IR	A96ZN00025	Wire clip IF/IR
28	A96ZN00026	Supply wire IF/IR 17/22/33/42/53	A96ZN00026	Supply wire IF/IR 17/22/33/42/53
31	A96ZF00004	Pivot for fixing spring IR 33/42/53	A96ZF00004	Pivot for fixing spring IR 33/42/53
32	A86ME30008	Spring diam. 1,2 x diam. 8,5 x 20/13 IR	A86ME30008	Spring diam. 1,2 x diam. 8,5 x 20/13 IR
33	A96ZA00002	Rod breaking dough IF/IR 33	A96ZA00003	Rod breaking dough IF/IR 42
34	A86ME24117	Screw M10x25 TF÷TR	A86ME24117	Screw M10x25 TF÷TR
35	A96ZF00008	Head closing knob IR	A96ZF00008	Head closing knob IR
36	A96ZI00029	Closing handle axle IR 33/42/53	A96ZI00029	Closing handle axle IR 33/42/53
37	A96ZN00036	Spring Ø 1,5 x Ø 14 x 30/6 IR	A96ZN00036	Spring Ø 1,5 x Ø 14 x 30/6 IR
38	A96ZF00009	Pin diam. 3,2 IR	A96ZF00009	Pin diam. 3,2 IR
39	A96ZB00002	Side safety panel IR 33	A96ZB00003	Side safety panel IR 42
41	A96ZF00011	Steel Foot M12 IF/IR	A96ZF00011	Steel Foot M12 IF/IR
42	A96ZF00019	Insert for plastic foot IF/IR	A96ZF00019	Insert for plastic foot IF/IR
43	A96ZG00003	Wheel with brake M12 IF/IR	A96ZG00003	Wheel with brake M12 IF/IR
44	A96ZJ00024	Motor 400 V -1,5 kW - 50 Hz 90 B14 IF/IR 33/42/53 + IF/IR 33/42/53VS	A96ZJ00024	Motor 400 V -1,5 kW - 50 Hz 90 B14 IF/IR 33/42/53 + IF/IR 33/42/53VS
45	A96ZC00004	Cover IF/IR 33/42/53 (red)	A96ZC00004	Cover IF/IR 33/42/53 (red)
47	A96ZD00002	Ring in nylon IF/IR	A96ZD00002	Ring in nylon IF/IR

48	A86ME24119	Screw M4x30 TF÷TR	A86ME24119	Screw M4x30 TF÷TR
49	A96ZF00018	Gas spring IR	A96ZF00018	Gas spring IR
50	A96ZN00042	Micro-switch IR	A96ZN00042	Micro-switch IR
51	A96ZI00026	Head rotation shaft IR 17/22	A96ZI00026	Head rotation shaft IR 17/22
52	A96ZF00007	Axis cover IR	A96ZF00007	Axis cover IR
54	A96ZG00004	Wheel without brake M12 IF/IR	A96ZG00004	Wheel without brake M12 IF/IR
55	A96ZN00064	Contactor CN-6/4A 24 V IF/IR - SA300	A96ZN00064	Contactor CN-6/4A 24 V IF/IR - SA300
57	A96ZN00031	Emergency stop switch IF/IR	A96ZN00031	Emergency stop switch IF/IR
58	A96ZL00018	Flange fixing gear box TF÷TR 33	A96ZL00011	Ring fixing reduction gear IF/IR 33/42/53
60	A86ME32014	Screw M8x40 TF÷TR	A86ME32014	Screw M8x40 TF÷TR
61	A96ZL00015	Gear box CM63 90 B14 1/30 FLS IF/IR 33/42/53	A96ZL00015	Gear box CM63 90 B14 1/30 FLS IF/IR 33/42/53
62	A86ME24118	Screw M5x10 TF÷TR	A86ME24118	Screw M5x10 TF÷TR
63	S40PS67004	Back panel TR 33÷42÷53 (red colour)	S40PS67004	Back panel TR 33÷42÷53 (red colour)
64	A96ZN00039	Transformer 380 V TF÷TF 2V÷TR÷TR 2V	A96ZN00039	Transformer 380 V TF÷TF 2V÷TR÷TR 2V
65	A96ZN00037	Main switch IF/IR	A96ZN00037	Main switch IF/IR
66	A96ZC00014	Front oblique switch panel IF 33/42/53	A96ZC00014	Front oblique switch panel IF 33/42/53
67	A96ZN00032	Starting button IF/IR	A96ZN00032	Starting button IF/IR
68	A96ZM00002	Timer 0-30 min. IF/IR	A96ZM00002	Timer 0-30 min. IF/IR
69	S14MT67002	Chain 06B/73 TF÷TR 33	S14MT67003	Spiral chain 08B/69 TF÷TR 42
70	A96ZH00011	Chain pinion gear z=29 08B IF/IR 33/42/53	A96ZH00011	Chain pinion gear z=29 08B IF/IR 33/42/53
71	A96ZN00029	Ball bearing base IR 33/42/53	A96ZN00029	Ball bearing base IR 33/42/53
72	A86ME26027	S.steel washer Ø 10 TF÷TR	A86ME26027	S.steel washer Ø 10 TF÷TR
73	A86ME26026	S.steel washer spring Ø 10 TF÷TR	A86ME26026	S.steel washer spring Ø 10 TF÷TR
74	A86ME24125	Screw TE M10x35 INOX TF÷TR	A86ME24125	Screw TE M10x35 INOX TF÷TR
75	A96ZI00021	Connecting shaft IR 33/42/53	A96ZI00021	Connecting shaft IR 33/42/53
76	A86ME36006	Key 6X6X30	A86ME36006	Key 6X6X30
77	A96ZN00027	Connecting pin Ø 10x50 IR	A96ZN00027	Connecting pin Ø 10x50 IR
78	A96ZT00002	Transmission joint IR 33/42/53	A96ZT00002	Transmission joint IR 33/42/53
79	A86ME25024	Nut M10 ZN	A86ME25024	Nut M10 ZN
80	A96ZI00025	Transmission shaft base UCF 205 IF 33/42/53 - IR 33/42/53	A96ZI00025	Transmission shaft base UCF 205 IF 33/42/53 - IR 33/42/53
81	A96ZH00009	Chain pinion gear z=16 06B IF/IR 33/42/53 + VS	A96ZH00009	Chain pinion gear z=16 06B IF/IR 33/42/53 + VS
82	A86ME36006	Key 6X6X30	A86ME36006	Key 6X6X30
83	A96ZI00018	Transmission shaft IR 33	A96ZI00033	Transmission shaft IR 42/53
84	A86ME36007	Key 8x7x35 TF÷TR	A86ME36007	Key 8x7x35 TF÷TR
92	S69IV67001	Bowls peg TR	S69IV67001	Bowls peg TR
93	A96ZS00009	SPIRAL PLATE TF÷TR 33÷42÷53	A96ZS00009	SPIRAL PLATE TF÷TR 33÷42÷53
94	A96ZD00003	O-ring diam. 20x2,5 IR	A96ZD00003	O-ring diam. 20x2,5 IR
95	A96ZN00058	Proximity micro L=75 mm IR 17/22/33/42/53	A96ZN00058	Proximity micro L=75 mm IR 17/22/33/42/53
96	A86ME25026	Nut M12 ZN	A86ME25026	Nut M12 ZN
97	A96ZN00053	Nylon block base IF/IR	A96ZN00053	Nylon block base IF/IR
98	A86ME25018	Nut M5 ZN	A86ME25018	Nut M5 ZN
99	A96ZN00052	Tensioner base IF/IR	A96ZN00052	Tensioner base IF/IR
100	A86ME24122	Screw TCEI M5x30 TF÷TR	A86ME24122	Screw TCEI M5x30 TF÷TR
101	A96ZN00054	Nylon block	A96ZN00054	Nylon block
102	A86ME24124	Screw TCEI M10x25 TR	A86ME24124	Screw TCEI M10x25 TR
103	A96ZF00012	Head closing hook	A96ZF00012	Head closing hook
104	A86ME25019	Nut M8 ZN	A86ME25019	Nut M8 ZN

105	A96ZV00027	Bowl chain tensioner part IF/IR 17/22	A96ZV00028	Bowl chain tensioner part IF/IR 33/42/53
106	A96ZN00060	Control card 115/230/400 V TF÷TF 2V÷TR÷TR 2V	A96ZN00060	Control card 115/230/400 V TF÷TF 2V÷TR÷TR 2V
123	A96ZF00014	Red frame IF/IR 33/42/53	A96ZF00014	Red frame IF/IR 33/42/53
POS.	**IRM33**	**DESCRIPTION**	**IRM42**	**DESCRIPTION**
28	A96ZN00047	Feed cable IFM/IRM	A96ZN00047	Feed cable IFM/IRM
44	A96ZJ00039	Motor 230 V - 1,3 kW - 50 Hz 80 B14 IFM/IRM 33		
65	A96ZN00043	Main switch IFM/IRM/IF VS/IR VS	A96ZN00043	Main switch IFM/IRM/IF VS/IR VS
POS.	**IF33 2V**	**DESCRIPTION**	**IF42 2V**	**DESCRIPTION**
44	A96ZJ00044	Motor YS90B14 4-6 Poles/1100-800W/1440-960RPM 400V 50HZ - IF÷IR 33÷42÷53 2V	A96ZJ00044	Motor YS90B14 4-6 Poles/1100-800W/1440-960RPM 400V 50HZ - IF÷IR 33÷42÷53 2V
53	A96ZO00009	Control box IFE/IRE	A96ZO00009	Control box IFE/IRE
61	A96ZL00024	Gear box TCM063I 20/90 B14 IF÷IR 33÷42÷53 2V	A96ZL00024	Gear box TCM063I 20/90 B14 IF÷IR 33÷42÷53 2V
65	A96ZN00038	Main switch IF/IR 2V	A96ZN00038	Main switch IF/IR 2V
66	A96ZC00030	Control panel black with flag IF÷IR 2V	A96ZC00030	Control panel black with flag IF÷IR 2V
67	A96ZN00089	Complete black/white switch IF-IR 17/22/33/42/53	A96ZN00089	Complete black/white switch IF-IR 17/22/33/42/53

POS.	IR53	DESCRIPTION
1	A96ZE00011	Safety guard IF/IR 53
2	A96ZV00019	Bowl IF/IR 53
3	A96ZV00020	Bowl flange IR
4	A96ZV00024	Plate block bowl IR 53
5	A96ZD00001	Snap ring diam. 25 IF/IR
6	A89CK00010	Bearing 6205-2RS TF÷TR
7	A96ZV00025	Support bowl base IF/IR 17/22/33/42/53
8	S14MT67008	Bowl spiral 06B/144 TF÷TR 33÷42÷53
9	A96ZR00005	Crown z=85 06B IF/IR 33/42/53
10	A96ZI00013	Bowl support axle IF/IR 17/22/33/42/53
11	A86ME24121	Screw M8x60 TF
12	A96ZE00013	Guard ring IR
13	S63FS67001	Safety guard pin TF/TR 33/42/53
14	A96ZE00014	Cam for safety guard IR
15	A86ME32013	Screw M8x10 TF÷TR
16	A86ME24116	Screw M8x25 TF÷TR
17	A86ME26024	S.steel washer grover Ø 8,5 TF÷TR
18	A86ME26025	S.Steel washer Ø8 TF÷TR
19	A96ZH00007	Pinion gear z=15 08B IF/IR 33/42/53
20	A96ZS00007	Spiral support IF/IR 33/42/53
21	A86ME24114	Screw M8x30
22	A89CK00010	Bearing 6205-2RS TF÷TR
22.01	A89CK00011	Bearing 6006-2RS IF÷IR 33÷42÷53
23	A86ME36009	Key 6x6x35 TF÷TR 33÷42÷53
24	A96ZI00016	Axle for spiral base IF/IR 33/42/53
25	A96ZS00017	Spiral IF÷IR 53
26	A96ZN00024	Distance sensor with two cables "NO" IR/IR 2V
27	A96ZN00025	Wire clip IF/IR
28	A96ZN00026	Supply wire IF/IR 17/22/33/42/53
31	A96ZF00004	Pivot for fixing spring IR 33/42/53
32	A86ME30008	Spring diam. 1,2 x diam. 8,5 x 20/13 IR
33	A96ZA00004	Rod breaking dough IF/IR 53
34	A86ME24117	Screw M10x25 TF÷TR
35	A96ZF00008	Head closing knob IR
36	A96ZI00029	Closing handle axle IR 33/42/53
37	A96ZN00036	Spring Ø 1,5 x Ø 14 x 30/6 IR
38	A96ZF00009	Pin diam. 3,2 IR
39	A96ZB00004	Side safety panel IR 53
41	A96ZF00011	Steel Foot M12 IF/IR
42	A96ZF00019	Insert for plastic foot IF/IR
43	A96ZG00003	Wheel with brake M12 IF/IR
44	A96ZJ00024	Motor 400 V -1,5 kW - 50 Hz 90 B14 IF/IR 33/42/53 + IF/IR 33/42/53VS
45	A96ZC00004	Cover IF/IR 33/42/53 (red)
47	A96ZD00002	Ring in nylon IF/IR
48	A86ME24119	Screw M4x30 TF÷TR
49	A96ZF00018	Gas spring IR
50	A96ZN00042	Micro-switch IR
51	A96ZI00026	Head rotation shaft IR 17/22
52	A96ZF00007	Axis cover IR
54	A96ZG00004	Wheel without brake M12 IF/IR
55	A96ZN00064	Contactor CN-6/4A 24 V IF/IR - SA300
57	A96ZN00031	Emergency stop switch IF/IR

58	A96ZL00011	Ring fixing reduction gear IF/IR 33/42/53
60	A86ME32014	Screw M8x40 TF÷TR
61	A96ZL00015	Gear box CM63 90 B14 1/30 FLS IF/IR 33/42/53
62	A86ME24118	Screw M5x10 TF÷TR
63	S40PS67004	Back panel TR 33÷42÷53 (red colour)
64	A96ZN00039	Transformer 380 V TF÷TF 2V÷TR÷TR 2V
65	A96ZN00037	Main switch IF/IR
66	A96ZC00014	Front oblique switch panel IF 33/42/53
67	A96ZN00032	Starting button IF/IR
68	A96ZM00002	Timer 0-30 min. IF/IR
69	S14MT67018	Spiral chain 08B/76 IF÷IR 53 VS 2013
70	A96ZH00011	Chain pinion gear z=29 08B IF/IR 33/42/53
71	A96ZN00029	Ball bearing base IR 33/42/53
72	A86ME26027	S.steel washer Ø 10 TF÷TR
73	A86ME26026	S.steel washer spring Ø 10 TF÷TR
74	A86ME24125	Screw TE M10x35 INOX TF÷TR
75	A96ZI00021	Connecting shaft IR 33/42/53
76	A86ME36006	Key 6X6X30
77	A96ZN00027	Connecting pin Ø 10x50 IR
78	A96ZT00002	Transmission joint IR 33/42/53
79	A86ME25024	Nut M10 ZN
80	A96ZI00025	Transmission shaft base UCF 205 IF 33/42/53 - IR 33/42/53
81	A96ZH00009	Chain pinion gear z=16 06B IF/IR 33/42/53 + VS
82	A86ME36006	Key 6X6X30
83	A96ZI00033	Transmission shaft IR 42/53
84	A86ME36007	Key 8x7x35 TF÷TR
92	S69IV67001	Bowls peg TR
93	A96ZS00009	SPIRAL PLATE TF÷TR 33÷42÷53
94	A96ZD00003	O-ring diam. 20x2,5 IR
95	A96ZN00058	Proximity micro L=75 mm IR 17/22/33/42/53
96	A86ME25026	Nut M12 ZN
97	A96ZN00053	Nylon block base IF/IR
98	A86ME25018	Nut M5 ZN
99	A96ZN00052	Tensioner base IF/IR
100	A86ME24122	Screw TCEI M5x30 TF÷TR
101	A96ZN00054	Nylon block
102	A86ME24124	Screw TCEI M10x25 TR
103	A96ZF00012	Head closing hook
104	A86ME25019	Nut M8 ZN
105	A96ZV00028	Bowl chain tensioner part IF/IR 33/42/53
106	A96ZN00060	Control card 115/230/400 V TF÷TF 2V÷TR÷TR 2V
123	A96ZF00014	Red frame IF/IR 33/42/53
POS.	**IRM53**	**DESCRIPTION**
28	A96ZN00047	Feed cable IFM/IRM
44	-	
65	A96ZN00043	Main switch IFM/IRM/IF VS/IR VS
POS.	**IF53 2V**	**DESCRIPTION**
44	A96ZJ00044	Motor YS90B14 4-6 Poles/1100-800W/1440-960RPM 400V 50HZ - IF÷IR 33÷42÷53 2V
53	A96ZO00009	Control box IFE/IRE
61	A96ZL00024	Gear box TCM063I 20/90 B14 IF÷IR 33÷42÷53 2V
65	A96ZN00038	Main switch IF/IR 2V
66	A96ZC00030	Control panel black with flag IF÷IR 2V
67	A96ZN00089	Complete black/white switch IF-IR 17/22/33/42/53

EXPLODED VIEW and SPARE PARTS LIST IF-VS ÷ IR-VS

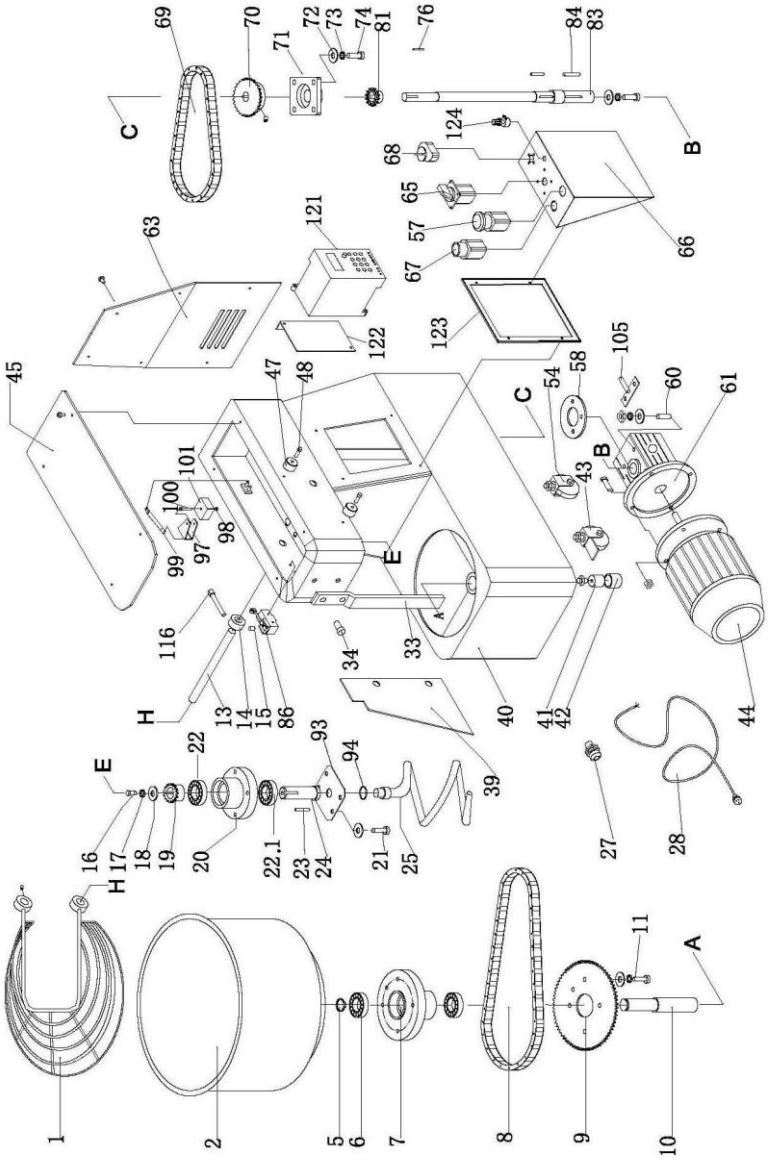

IF VS

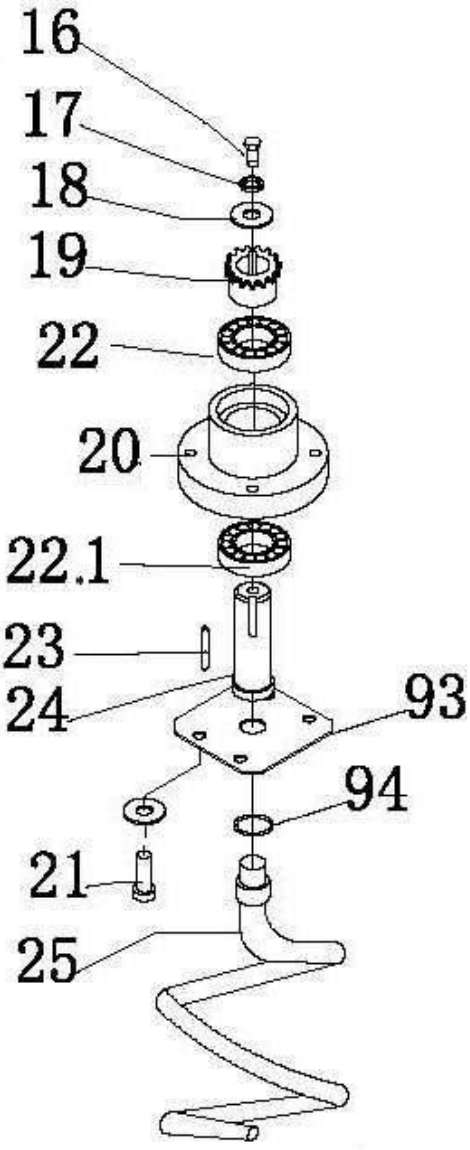

IF VS

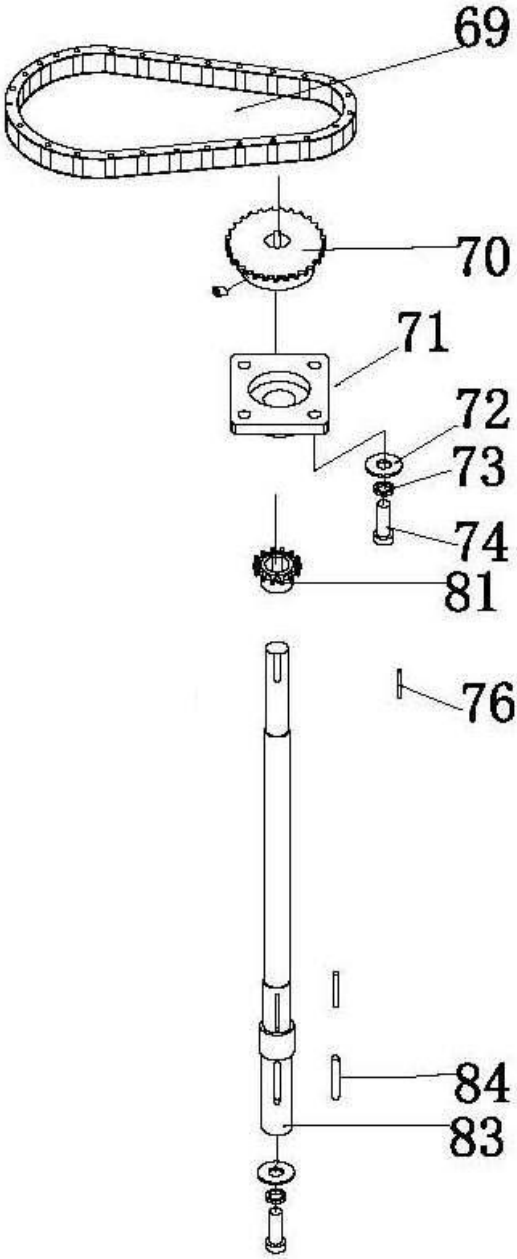

IF VS

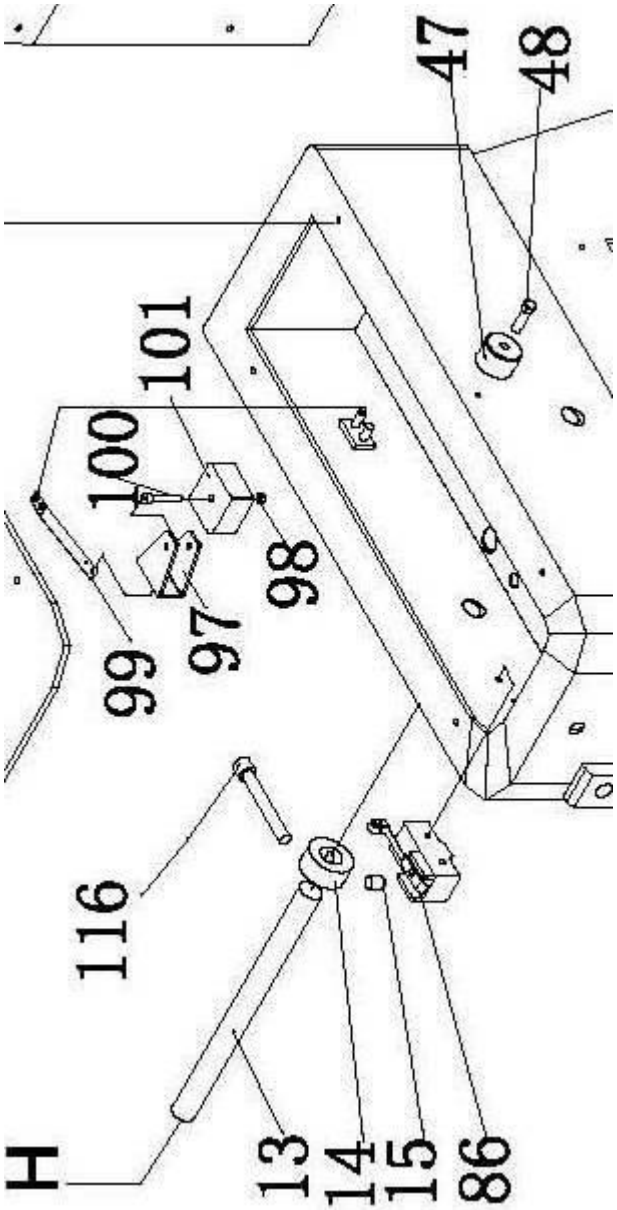

IF VS

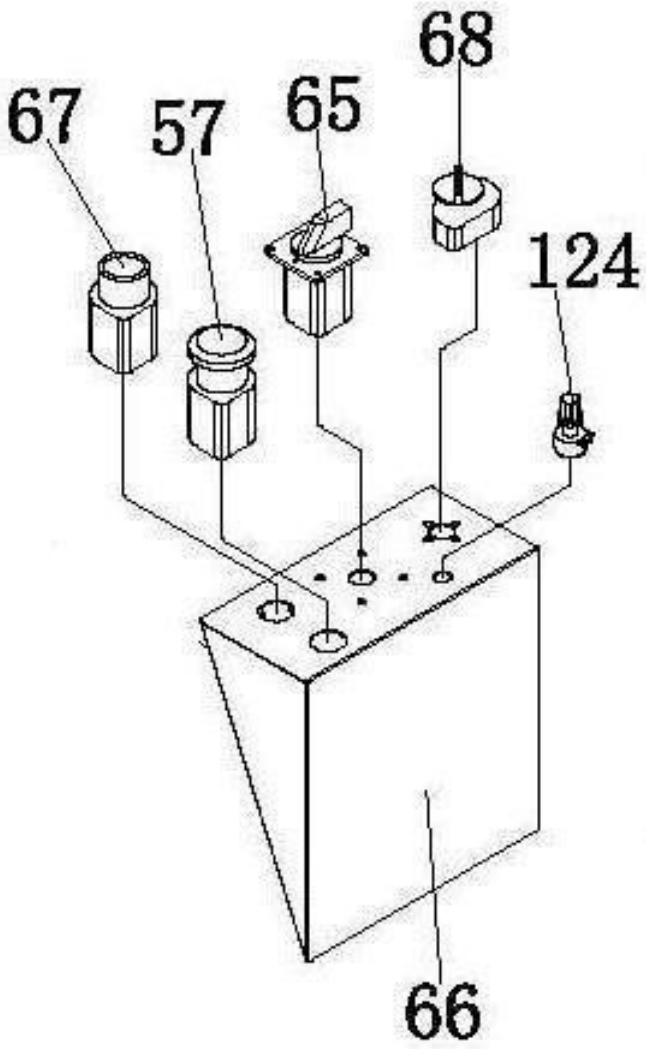

IF VS ÷ IR VS

POS.	IF17 VS	DESCRIPTION	IF22 VS	DESCRIPTION
1	A96ZE00007	Safety guard IF/IR 17	A96ZE00008	Safety guard IF/IR 22
2	A96ZV00015	Bowl IF/IR 17	A96ZV00016	Bowl IF/IR 22
5	A96ZD00001	Snap ring diam. 25 IF/IR	A96ZD00001	Snap ring diam. 25 IF/IR
6	A89CK00010	Bearing 6205-2RS TF÷TR	A89CK00010	Bearing 6205-2RS TF÷TR
7	A96ZV00025	Support bowl base IF/IR 17/22/33/42/53	A96ZV00025	Support bowl base IF/IR 17/22/33/42/53
8	S14MT67014	Bowl chain 06B/120 IF÷IR 17÷22VS	S14MT67014	Bowl chain 06B/120 IF÷IR 17÷22VS
9	A96ZN00066	Chain wheel z=58 06B	A96ZN00066	Chain wheel z=58 06B
10	A96ZI00013	Bowl support axle IF/IR 17/22/33/42/53	A96ZI00013	Bowl support axle IF/IR 17/22/33/42/53
11	A86ME24115	Screw M8x35 TF÷TR	A86ME24115	Screw M8x35 TF÷TR
13	A96ZI00014	Safety guard pin IF/IR 17/22	A96ZI00014	Safety guard pin IF/IR 17/22
14	A96ZE00012	Cam for safety guard IF	A96ZE00012	Cam for safety guard IF
15	A86ME32013	Screw M8x10 TF÷TR	A86ME32013	Screw M8x10 TF÷TR
16	A86ME24116	Screw M8x25 TF÷TR	A86ME24116	Screw M8x25 TF÷TR
17	A86ME26024	S.steel washer grover Ø 8,5 TF÷TR	A86ME26024	S.steel washer grover Ø 8,5 TF÷TR
18	A86ME26025	S.Steel washer Ø8 TF÷TR	A86ME26025	S.Steel washer Ø8 TF÷TR
19	A96ZH00006	Pinion gear z=15 06B IF/IR 17/22	A96ZH00006	Pinion gear z=15 06B IF/IR 17/22
20	A96ZS00006	Spiral support IF/IF 17/22	A96ZS00006	Spiral support IF/IF 17/22
21	A86ME24114	Screw M8x30	A86ME24114	Screw M8x30
22	A89CK00010	Bearing 6205-2RS TF÷TR	A89CK00010	Bearing 6205-2RS TF÷TR
22.01	A89CK00010	Bearing 6205-2RS TF÷TR	A89CK00010	Bearing 6205-2RS TF÷TR
23	A86ME36008	Key 6x6x20 TF÷TR 17÷22	A86ME36008	Key 6x6x20 TF÷TR 17÷22
24	A96ZI00015	A96ZI00015	A96ZI00015	A96ZI00015
25	A96ZS00004	Spiral IF/IR 17/22	A96ZS00004	Spiral IF/IR 17/22
27	A96ZN00025	Wire clip IF/IR	A96ZN00025	Wire clip IF/IR
28	A96ZN00026	Supply wire IF/IR 17/22/33/42/53	A96ZN00026	Supply wire IF/IR 17/22/33/42/53
33	A96ZA00001	Dough breaking rod IF/IR 17	A96ZA00001	Dough breaking rod IF/IR 17
34	A86ME24117	Screw M10x25 TF÷TR	A86ME24117	Screw M10x25 TF÷TR
39	A96ZB00006	Side safety panel IF 17	A96ZB00006	Side safety panel IF 17
41	A96ZF00011	Steel Foot M12 IF/IR	A96ZF00011	Steel Foot M12 IF/IR
42	A96ZF00019	Insert for plastic foot IF/IR	A96ZF00019	Insert for plastic foot IF/IR
43	A96ZG00003	Wheel with brake M12 IF/IR	A96ZG00003	Wheel with brake M12 IF/IR
44	A87MR56010	Motor 400 V - 0,75 kW - 50 Hz 80 B14 IF/IR17/22 + IF/IR17/22 VS PF30-33	A87MR56010	Motor 400 V - 0,75 kW - 50 Hz 80 B14 IF/IR17/22 + IF/IR17/22 VS PF30-33
45	A96ZC00002	Cover IF/IR 17/22 (red)	A96ZC00002	Cover IF/IR 17/22 (red)
47	A96ZD00002	Ring in nylon IF/IR	A96ZD00002	Ring in nylon IF/IR
48	A86ME24119	Screw M4x30 TF÷TR	A86ME24119	Screw M4x30 TF÷TR
54	A96ZG00004	Wheel without brake M12 IF/IR	A96ZG00004	Wheel without brake M12 IF/IR
55	A96ZN00064	Contactor CN-6/4A 24 V IF/IR - SA300	A96ZN00064	Contactor CN-6/4A 24 V IF/IR - SA300
57	A96ZN00031	Emergency stop switch IF/IR	A96ZN00031	Emergency stop switch IF/IR
58	A96ZL00010	Reduction gear fixing ring IF/IR 17/22	A96ZL00010	Reduction gear fixing ring IF/IR 17/22
60	A86ME32014	Screw M8x40 TF÷TR	A86ME32014	Screw M8x40 TF÷TR
61	A96ZL00008	Gear box CM050 80 B14 1/30 FLS IF/R 17/22	A96ZL00008	Gear box CM050 80 B14 1/30 FLS IF/R 17/22
63	A96ZC00007	Back panel TF 17/22 (red)	A96ZC00007	Back panel TF 17/22 (red)
64	A96ZN00040	Transformer 230V/24V single-phase IFM/IRM	A96ZN00040	Transformer 230V/24V single-phase IFM/IRM
65	A96ZN00043	Main switch IFM/IRM/IF VS/IR VS	A96ZN00043	Main switch IFM/IRM/IF VS/IR VS

66	A96ZC00013	Front oblique switch panel IF 17/22	A96ZC00013	Front oblique switch panel IF 17/22
67	A96ZN00032	Starting button IF/IR	A96ZN00032	Starting button IF/IR
68	A96ZM00002	Timer 0-30 min. IF/IR	A96ZM00002	Timer 0-30 min. IF/IR
69	S14MT67012	Spiral chain 06B/94 TF÷TR 17VS	S14MT67013	Spiral chain 06B/90 TF÷TR 22VS
70	A96ZH00013	Chain pinion gear z=40 06B	A96ZH00013	Chain pinion gear z=40 06B
71	A96ZI00024	Transmission shaft base UCF 204 IF 17/22 - IR 17/22	A96ZI00024	Transmission shaft base UCF 204 IF 17/22 - IR 17/22
72	A86ME26027	S.steel washer Ø 10 TF÷TR	A86ME26027	S.steel washer Ø 10 TF÷TR
73	A86ME26026	S.steel washer spring Ø 10 TF÷TR	A86ME26026	S.steel washer spring Ø 10 TF÷TR
74	A86ME24120	Screw M10x35 TF÷TR	A86ME24120	Screw M10x35 TF÷TR
76	A86ME36006	Key 6X6X30	A86ME36006	Key 6X6X30
81	A96ZH00009	Chain pinion gear z=16 06B	A96ZH00009	Chain pinion gear z=16 06B
83	A96ZI00030	Transmission shaft TF 17-22 "2008"	A96ZI00030	Transmission shaft TF 17-22 "2008"
84	A86ME36007	Key 8x7x35 TF÷TR	A86ME36007	Key 8x7x35 TF÷TR
86	A96ZN00030	Micro-switch IF	A96ZN00030	Micro-switch IF
93	S42PL00002	SPIRAL PLATE TF÷TR 17÷22	S42PL00002	SPIRAL PLATE TF÷TR 17÷22
94	A96ZD00003	O-ring diam. 20x2,5 IR	A96ZD00003	O-ring diam. 20x2,5 IR
97	A96ZN00053	Nylon block base IF/IR	A96ZN00053	Nylon block base IF/IR
98	A86ME25018	Nut M5 ZN	A86ME25018	Nut M5 ZN
99	A96ZN00052	Tensioner base IF/IR	A96ZN00052	Tensioner base IF/IR
100	A86ME24122	Screw TCEI M5x30 TF÷TR	A86ME24122	Screw TCEI M5x30 TF÷TR
101	A96ZN00054	Nylon block	A96ZN00054	Nylon block
105	A96ZV00027	Bowl chain tensioner part IF/IR 17/22	A96ZV00027	Bowl chain tensioner part IF/IR 17/22
106	A96ZN00055	Control card 230/ 400 V IF/IR/IFM/IRM 17/22/33/42/53	A96ZN00055	Control card 230/ 400 V IF/IR/IFM/IRM 17/22/33/42/53
116	A96ZF00002	Screw M8x100 TR	A96ZF00002	Screw M8x100 TR
121	A88IY00001	Inverter Telemecanique	A88IY00001	Inverter Telemecanique
122	A96ZF00021	Fixing support inverter IR 17/22 VS	A96ZF00021	Fixing support inverter IR 17/22 VS
123	A96ZF00013	Red frame IF/IR 17/22	A96ZF00013	Red frame IF/IR 17/22
124	A96ZN00084	Potentiometer 10K FOR INVERTER	A96ZN00084	Potentiometer 10K FOR INVERTER

POS.	IF33 VS	DESCRIPTION	IF42 VS	DESCRIPTION
1	A96ZE00009	Safety guard IF/IR 33	A96ZE00010	Safety guard IF/IR 42
2	A96ZV00017	Bowl IF/IR 33	A96ZV00018	Bowl IF/IR 42
5	A96ZD00001	Snap ring diam. 25 IF/IR	A96ZD00001	Snap ring diam. 25 IF/IR
6	A89CK00010	Bearing 6205-2RS TF÷TR	A89CK00010	Bearing 6205-2RS TF÷TR
7	A96ZV00025	Support bowl base IF/IR 17/22/33/42/53	A96ZV00025	Support bowl base IF/IR 17/22/33/42/53
8	S14MT67015	Bowl chain 06B/130 TF÷TR 33-42-53VS	S14MT67015	Bowl chain 06B/130 TF÷TR 33-42-53VS
9	A96ZN00066	Chain wheel z=58 06B	A96ZN00066	Chain wheel z=58 06B
10	A96ZI00013	Bowl support axle IF/IR 17/22/33/42/53	A96ZI00013	Bowl support axle IF/IR 17/22/33/42/53
11	A86ME24115	Screw M8x35 TF÷TR	A86ME24115	Screw M8x35 TF÷TR
13	S63FS67001	Safety guard pin TF/TR 33/42/53	S63FS67001	Safety guard pin TF/TR 33/42/53
14	A96ZE00012	Cam for safety guard IF	A96ZE00012	Cam for safety guard IF
15	A86ME32013	Screw M8x10 TF÷TR	A86ME32013	Screw M8x10 TF÷TR
16	A86ME24116	Screw M8x25 TF÷TR	A86ME24116	Screw M8x25 TF÷TR
17	A86ME26024	S.steel washer grover Ø 8,5 TF÷TR	A86ME26024	S.steel washer grover Ø 8,5 TF÷TR
18	A86ME26025	S.Steel washer Ø8 TF÷TR	A86ME26025	S.Steel washer Ø8 TF÷TR
19	A96ZH00014	Chain pinion gear z=16 08B	A96ZH00014	Chain pinion gear z=16 08B
20	A96ZS00007	Spiral support IF/IR 33/42/53	A96ZS00007	Spiral support IF/IR 33/42/53
21	A86ME24114	Screw M8x30	A86ME24114	Screw M8x30
22	A89CK00010	Bearing 6205-2RS TF÷TR	A89CK00010	Bearing 6205-2RS TF÷TR
22.01	A89CK00011	Bearing 6006-2RS IF÷IR 33÷42÷53	A89CK00011	Bearing 6006-2RS IF÷IR 33÷42÷53
23	A86ME36009	Key 6x6x35 TF÷TR 33÷42÷53	A86ME36009	Key 6x6x35 TF÷TR 33÷42÷53
24	A96ZI00016	Axle for spiral base IF/IR 33/42/53	A96ZI00016	Axle for spiral base IF/IR 33/42/53
25	A96ZS00005	Spiral IF/IR 33/42/53	A96ZS00005	Spiral IF/IR 33/42/53
27	A96ZN00025	Wire clip IF/IR	A96ZN00025	Wire clip IF/IR
28	A96ZN00026	Supply wire IF/IR 17/22/33/42/53	A96ZN00026	Supply wire IF/IR 17/22/33/42/53
33	A96ZA00002	Rod breaking dough IF/IR 33	A96ZA00003	Rod breaking dough IF/IR 42
34	A86ME24117	Screw M10x25 TF÷TR	A86ME24117	Screw M10x25 TF÷TR
39	A96ZB00007	Side safety panel IF 33	A96ZB00007	Side safety panel IF 33
41	A96ZF00011	Steel Foot M12 IF/IR	A96ZF00011	Steel Foot M12 IF/IR
42	A96ZF00019	Insert for plastic foot IF/IR	A96ZF00019	Insert for plastic foot IF/IR
43	A96ZG00003	Wheel with brake M12 IF/IR	A96ZG00003	Wheel with brake M12 IF/IR
44	A96ZJ00024	Motor 400 V -1,5 kW - 50 Hz 90 B14 IF/IR 33/42/53 + IF/IR 33/42/53VS	A96ZJ00024	Motor 400 V -1,5 kW - 50 Hz 90 B14 IF/IR 33/42/53 + IF/IR 33/42/53VS
45	A96ZC00004	Cover IF/IR 33/42/53 (red)	A96ZC00004	Cover IF/IR 33/42/53 (red)
47	A96ZD00002	Ring in nylon IF/IR	A96ZD00002	Ring in nylon IF/IR
48	A86ME24119	Screw M4x30 TF÷TR	A86ME24119	Screw M4x30 TF÷TR
54	A96ZG00004	Wheel without brake M12 IF/IR	A96ZG00004	Wheel without brake M12 IF/IR
55	A96ZN00064	Contactor CN-6/4A 24 V IF/IR - SA300	A96ZN00064	Contactor CN-6/4A 24 V IF/IR - SA300
57	A96ZN00031	Emergency stop switch IF/IR	A96ZN00031	Emergency stop switch IF/IR
58	A96ZL00018	Flange fixing gear box TF÷TR 33	A96ZL00011	Flange fixing gear box TF÷TR 33
60	A86ME32014	Screw M8x40 TF÷TR	A86ME32014	Screw M8x40 TF÷TR
61	A96ZL00015	Gear box CM63 90 B14 1/30 FLS IF/IR 33/42/53	A96ZL00015	Gear box CM63 90 B14 1/30 FLS IF/IR 33/42/53
63	A96ZC00008	Back panel IF 33/42/53 (red)	A96ZC00008	Back panel IF 33/42/53 (red)

64	A96ZN00040	Transformer 230V/24V single-phase IFM/IRM	A96ZN00040	Transformer 230V/24V single-phase IFM/IRM
65	A96ZN00043	Main switch IFM/IRM/IF VS/IR VS	A96ZN00043	Main switch IFM/IRM/IF VS/IR VS
66	A96ZC00014	Front oblique switch panel IF 33/42/53	A96ZC00014	Front oblique switch panel IF 33/42/53
67	A96ZN00032	Starting button IF/IR	A96ZN00032	Starting button IF/IR
68	A96ZM00002	Timer 0-30 min. IF/IR	A96ZM00002	Timer 0-30 min. IF/IR
69	S14MT67010	Bowl chain 08B/80 TF÷TR 33VS	S14MT67011	Spiral chain 08B/76 TF÷TR 42VS
70	A96ZH00015	Chain pinion gear z=40 08B	A96ZH00015	Chain pinion gear z=40 08B
71	A96ZI00025	Transmission shaft base UCF 205 IF 33/42/53 - IR 33/42/53	A96ZI00025	Transmission shaft base UCF 205 IF 33/42/53 - IR 33/42/53
72	A86ME26027	S.steel washer Ø 10 TF÷TR	A86ME26027	S.steel washer Ø 10 TF÷TR
73	A86ME26026	S.steel washer spring Ø 10 TF÷TR	A86ME26026	S.steel washer spring Ø 10 TF÷TR
74	A86ME24120	Screw M10x35 TF÷TR	A86ME24120	Screw M10x35 TF÷TR
76	A86ME36006	Key 6X6X30	A86ME36006	Key 6X6X30
81	A96ZH00009	Chain pinion gear z=16 06B	A96ZH00009	Chain pinion gear z=16 06B
83	S63TR67002	Transmissione shaft IF33	A96ZI00031	Transmission shaft IF 42/53
84	A86ME36007	Key 8x7x35 TF÷TR	A86ME36007	Key 8x7x35 TF÷TR
86	A96ZN00030	Micro-switch IF	A96ZN00030	Micro-switch IF
93	A96ZS00009	SPIRAL PLATE TF÷TR 33÷42÷53	A96ZS00009	SPIRAL PLATE TF÷TR 33÷42÷53
94	A96ZD00003	O-ring diam. 20x2,5 IR	A96ZD00003	O-ring diam. 20x2,5 IR
97	A96ZN00053	Nylon block base IF/IR	A96ZN00053	Nylon block base IF/IR
98	A86ME25018	Nut M5 ZN	A86ME25018	Nut M5 ZN
99	A96ZN00052	Tensioner base IF/IR	A96ZN00052	Tensioner base IF/IR
100	A86ME24122	Screw TCEI M5x30 TF÷TR	A86ME24122	Screw TCEI M5x30 TF÷TR
101	A96ZN00054	Nylon block	A96ZN00054	Nylon block
105	A96ZV00027	Bowl chain tensioner part IF/IR 17/22	A96ZV00028	Bowl chain tensioner part IF/IR 33/42/53
106	A96ZN00055	Control card 230/ 400 V IF/IR/IFM/IRM 17/22/33/42/53	A96ZN00055	Control card 230/ 400 V IF/IR/IFM/IRM 17/22/33/42/53
116	A96ZF00002	Screw M8x100 TR	A96ZF00002	Screw M8x100 TR
121	A88IY00002	TELEMECANIQUE INVERTER ATV12HU15M2 1.5 Kw 200/240V 50/60Hz	A88IY00002	TELEMECANIQUE INVERTER ATV12HU15M2 1.5 Kw 200/240V 50/60Hz
122	A96ZF00022	Fixing support inverter IR 33/42/53 VS	A96ZF00022	Fixing support inverter IR 33/42/53 VS
123	A96ZF00014	Red frame IF/IR 33/42/53	A96ZF00014	Red frame IF/IR 33/42/53
124	A96ZN00084	Potentiometer 10K FOR INVERTER	A96ZN00084	Potentiometer 10K FOR INVERTER

POS.	IF53 VS	DESCRIPTION
1	A96ZE00011	Safety guard IF/IR 53
2	A96ZV00019	Bowl IF/IR 53
5	A96ZD00001	Snap ring diam. 25 IF/IR
6	A89CK00010	Bearing 6205-2RS TF÷TR
7	A96ZV00025	Support bowl base IF/IR 17/22/33/42/53
8	S14MT67015	Bowl chain 06B/130 TF÷TR 33-42-53VS
9	A96ZN00066	Chain wheel z=58 06B
10	A96ZI00013	Bowl support axle IF/IR 17/22/33/42/53
11	A86ME24115	Screw M8x35 TF÷TR
13	S63FS67001	Safety guard pin TF/TR 33/42/53
14	A96ZE00012	Cam for safety guard IF
15	A86ME32013	Screw M8x10 TF÷TR
16	A86ME24116	Screw M8x25 TF÷TR
17	A86ME26024	S.steel washer grover Ø 8,5 TF÷TR
18	A86ME26025	S.Steel washer Ø8 TF÷TR
19	A96ZH00014	Chain pinion gear z=16 08B
20	A96ZS00007	Spiral support IF/IR 33/42/53
21	A86ME24114	Screw M8x30
22	A89CK00010	Bearing 6205-2RS TF÷TR
22.01	A89CK00011	Bearing 6006-2RS IF÷IR 33÷42÷53
23	A86ME36009	Key 6x6x35 TF÷TR 33÷42÷53
24	A96ZI00016	Axle for spiral base IF/IR 33/42/53
25	A96ZS00017	Spiral IF÷IR 53
27	A96ZN00025	Wire clip IF/IR
28	A96ZN00026	Supply wire IF/IR 17/22/33/42/53
33	A96ZA00004	Rod breaking dough IF/IR 53
34	A86ME24117	Screw M10x25 TF÷TR
39	A96ZB00007	Side safety panel IF 33
41	A96ZF00011	Steel Foot M12 IF/IR
42	A96ZF00019	Insert for plastic foot IF/IR
43	A96ZG00003	Wheel with brake M12 IF/IR
44	A96ZJ00024	Motor 400 V -1,5 kW - 50 Hz 90 B14 IF/IR 33/42/53 + IF/IR 33/42/53VS
45	A96ZC00004	Cover IF/IR 33/42/53 (red)
47	A96ZD00002	Ring in nylon IF/IR
48	A86ME24119	Screw M4x30 TF÷TR
54	A96ZG00004	Wheel without brake M12 IF/IR
55	A96ZN00064	Contactor CN-6/4A 24 V IF/IR - SA300
57	A96ZN00031	Emergency stop switch IF/IR
58	A96ZL00011	Flange fixing gear box TF÷TR 33
60	A86ME32014	Screw M8x40 TF÷TR
61	A96ZL00015	Gear box CM63 90 B14 1/30 FLS IF/IR 33/42/53
63	A96ZC00008	Back panel IF 33/42/53 (red)
64	A96ZN00040	Transformer 230V/24V single-phase IFM/IRM
65	A96ZN00043	Main switch IFM/IRM/IF VS/IR VS
66	A96ZC00014	Front oblique switch panel IF 33/42/53
67	A96ZN00032	Starting button IF/IR
68	A96ZM00002	Timer 0-30 min. IF/IR
69	S14MT67018	Spiral chain 08B/76 IF÷IR 53 VS 2013
70	A96ZH00015	Chain pinion gear z=40 08B
71	A96ZI00025	Transmission shaft base UCF 205 IF 33/42/53 - IR 33/42/53
72	A86ME26027	S.steel washer Ø 10 TF÷TR
73	A86ME26026	S.steel washer spring Ø 10 TF÷TR
74	A86ME24120	Screw M10x35 TF÷TR

76	A86ME36006	Key 6X6X30
81	A96ZH00009	Chain pinion gear z=16 06B
83	A96ZI00031	Transmission shaft IF 42/53
84	A86ME36007	Key 8x7x35 TF÷TR
86	A96ZN00030	Micro-switch IF
93	A96ZS00009	SPIRAL PLATE TF÷TR 33÷42÷53
94	A96ZD00003	O-ring diam. 20x2,5 IR
97	A96ZN00053	Nylon block base IF/IR
98	A86ME25018	Nut M5 ZN
99	A96ZN00052	Tensioner base IF/IR
100	A86ME24122	Screw TCEI M5x30 TF÷TR
101	A96ZN00054	Nylon block
105	A96ZV00028	Bowl chain tensioner part IF/IR 33/42/53
106	A96ZN00055	Control card 230/ 400 V IF/IR/IFM/IRM 17/22/33/42/53
116	A96ZF00002	Screw M8x100 TR
121	A88IY00002	TELEMECANIQUE INVERTER ATV12HU15M2 1.5 Kw 200/240V 50/60Hz
122	A96ZF00022	Fixing support inverter IR 33/42/53 VS
123	A96ZF00014	Red frame IF/IR 33/42/53
124	A96ZN00084	Potentiometer 10K FOR INVERTER

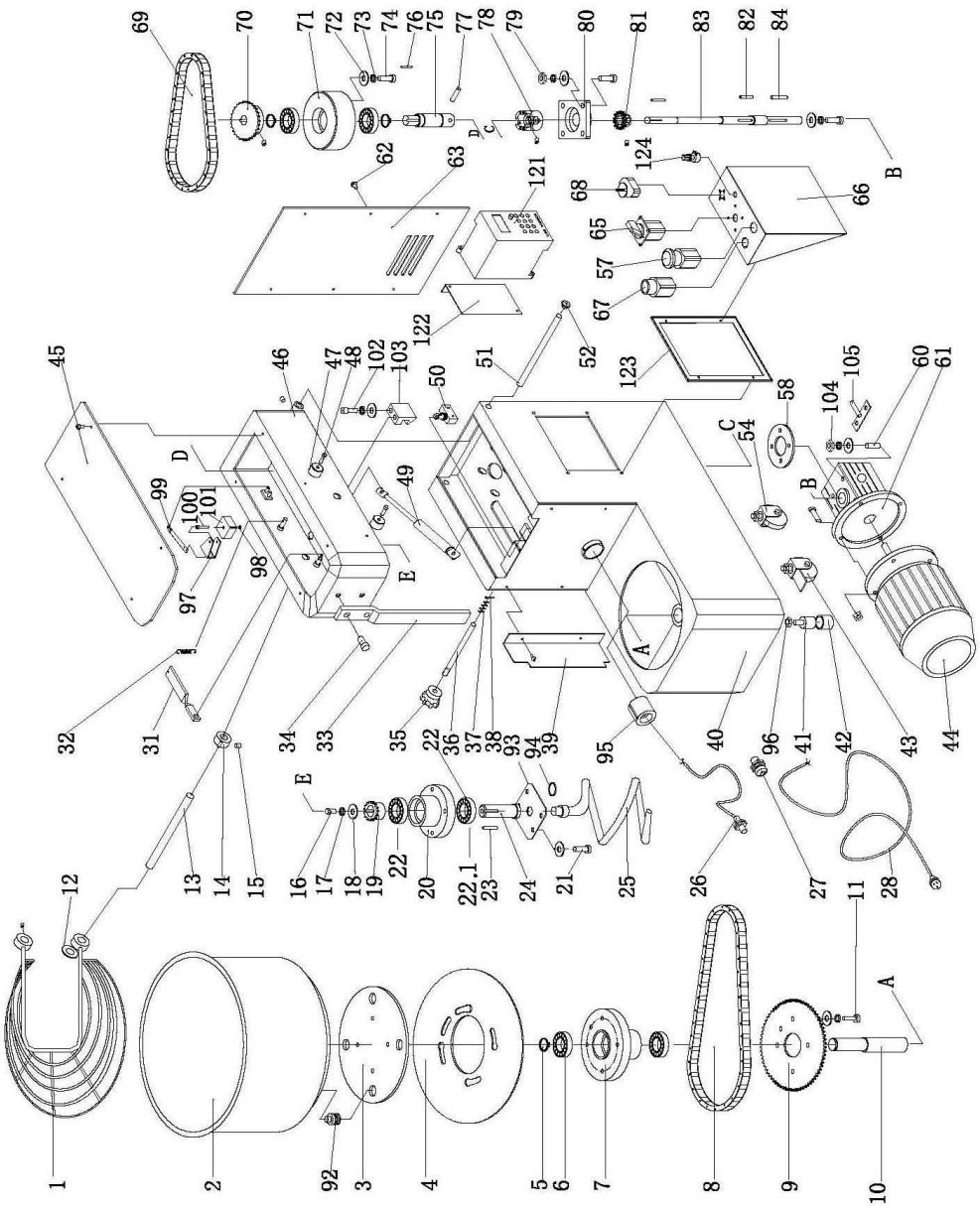

IR VS

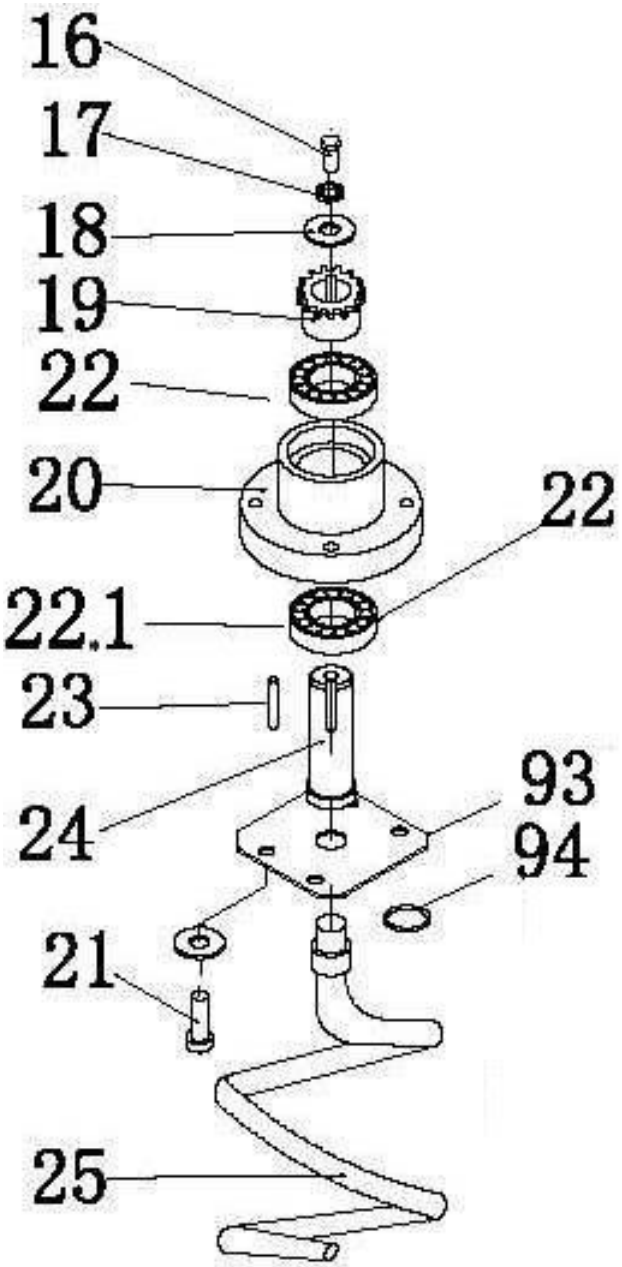

IR VS

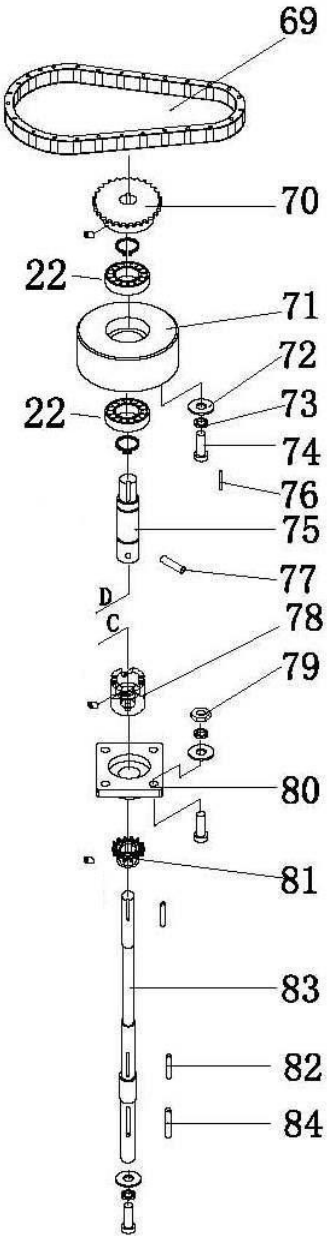

IR VS

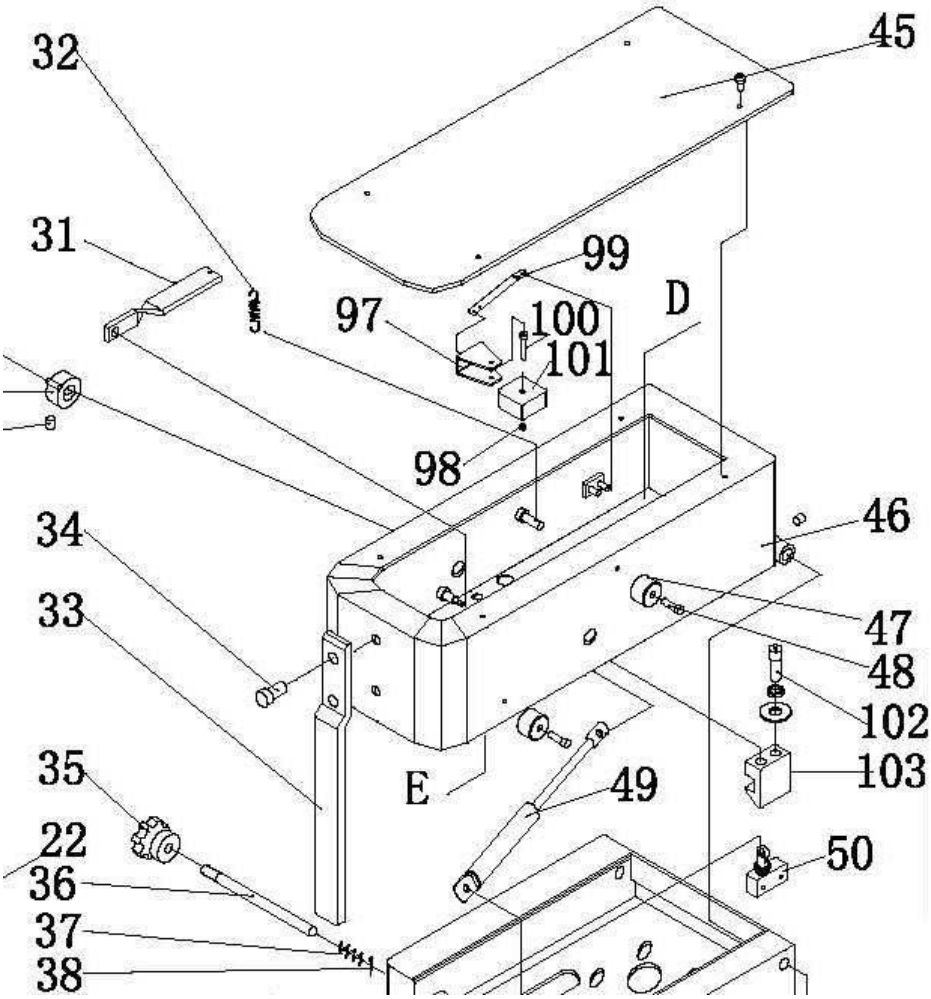
32
45
31
99
97
100
D
101
98
46
34
47
33
48
102
35
E
49
103
22
50
36
37
38

IR VS

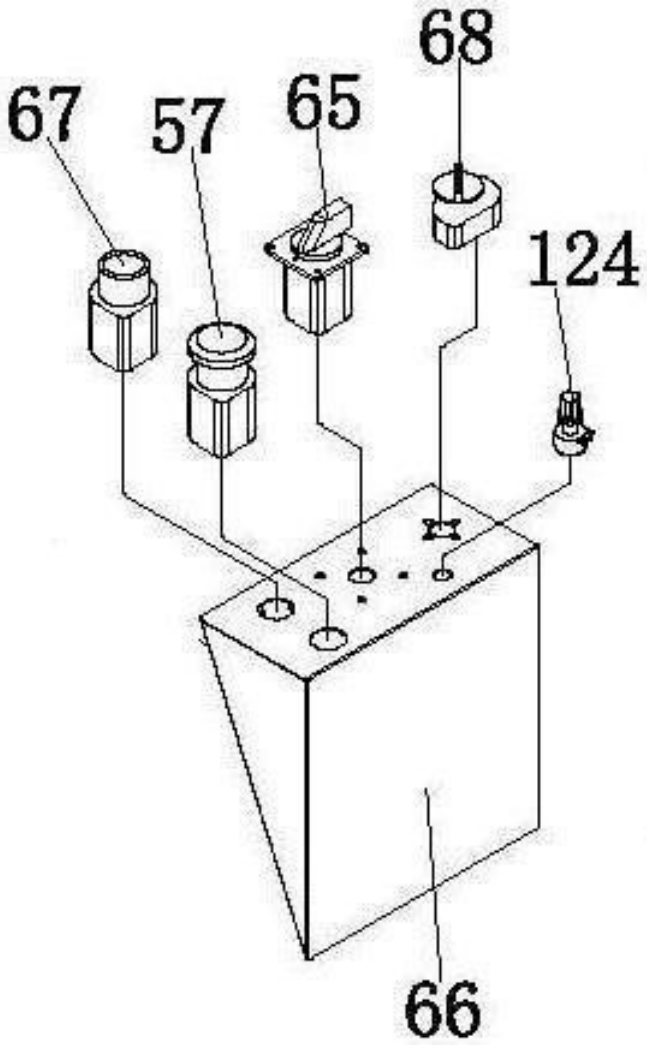

IF VS ÷ IR VS

Pos.	IR17 VS	DESCRIPTION	IR22 VS	DESCRIPTION
1	A96ZE00007	Safety guard IF/IR 17	A96ZE00008	Safety guard IF/IR 22
2	A96ZV00015	Bowl IF/IR 17	A96ZV00016	Bowl IF/IR 22
3	A96ZV00020	Bowl flange IR	A96ZV00020	Bowl flange IR
4	A96ZV00021	Bowl blocking plate IR 17	A96ZV00026	Plate block bowl IR 22
5	A96ZD00001	Snap ring diam. 25 IF/IR	A96ZD00001	Snap ring diam. 25 IF/IR
6	A89CK00010	Bearing 6205-2RS TF÷TR	A89CK00010	Bearing 6205-2RS TF÷TR
7	A96ZV00025	Support bowl base IF/IR 17/22/33/42/53	A96ZV00025	Support bowl base IF/IR 17/22/33/42/53
8	S14MT67014	Bowl chain 06B/120 IF÷IR 17÷22VS	S14MT67014	Bowl chain 06B/120 IF÷IR 17÷22VS
9	A96ZN00066	Chain wheel z=58 06B	A96ZN00066	Chain wheel z=58 06B
10	A96ZI00013	Bowl support axle IF/IR 17/22/33/42/53	A96ZI00013	Bowl support axle IF/IR 17/22/33/42/53
11	A86ME24121	Screw M8x60 TF	A86ME24121	Screw M8x60 TF
12	A96ZE00013	Guard ring IR	A96ZE00013	Guard ring IR
13	A96ZI00014	Safety guard pin IF/IR 17/22	A96ZI00014	Safety guard pin IF/IR 17/22
14	A96ZE00014	Cam for safety guard IR	A96ZE00014	Cam for safety guard IR
15	A86ME32013	Screw M8x10 TF÷TR	A86ME32013	Screw M8x10 TF÷TR
16	A86ME24116	Screw M8x25 TF÷TR	A86ME24116	Screw M8x25 TF÷TR
17	A86ME26024	S.steel washer grover Ø 8,5 TF÷TR	A86ME26024	S.steel washer grover Ø 8,5 TF÷TR
18	A86ME26025	S.Steel washer Ø8 TF÷TR	A86ME26025	S.Steel washer Ø8 TF÷TR
19	A96ZH00006	Pinion gear z=15 06B IF/IR 17/22	A96ZH00006	Pinion gear z=15 06B IF/IR 17/22
20	A96ZS00006	Spiral support IF/IF 17/22	A96ZS00006	Spiral support IF/IF 17/22
21	A86ME24114	Screw M8x30	A86ME24114	Screw M8x30
22	A89CK00010	Bearing 6205-2RS TF÷TR	A89CK00010	Bearing 6205-2RS TF÷TR
22.01	A89CK00010	Bearing 6205-2RS TF÷TR	A89CK00010	Bearing 6205-2RS TF÷TR
23	A86ME36008	Key 6x6x20 TF÷TR 17÷22	A86ME36008	Key 6x6x20 TF÷TR 17÷22
24	A96ZI00015	Axle for spiral base IF/IR 17/22	A96ZI00015	Axle for spiral base IF/IR 17/22
25	A96ZS00004	Spiral IF/IR 17/22	A96ZS00004	Spiral IF/IR 17/22
26	A96ZN00024	Distance sensor with two cables "NO" IR/IR 2V	A96ZN00024	Distance sensor with two cables "NO" IR/IR 2V
27	A96ZN00025	Wire clip IF/IR	A96ZN00025	Wire clip IF/IR
28	A96ZN00026	Supply wire IF/IR 17/22/33/42/53	A96ZN00026	Supply wire IF/IR 17/22/33/42/53
31	A96ZF00003	Pivot for fixing spring IR	A96ZF00003	Pivot for fixing spring IR
32	A86ME30008	Spring diam. 1,2 x diam. 8,5 x 20/13 IR	A86ME30008	Spring diam. 1,2 x diam. 8,5 x 20/13 IR
33	A96ZA00001	Dough breaking rod IF/IR 17	A96ZA00001	Dough breaking rod IF/IR 17
34	A86ME24117	Screw M10x25 TF÷TR	A86ME24117	Screw M10x25 TF÷TR
35	A96ZF00008	Head closing knob IR	A96ZF00008	Head closing knob IR
36	A96ZI00028	Head closing shaft IR 17/22	A96ZI00028	Head closing shaft IR 17/22
37	A96ZN00036	Spring Ø 1,5 x Ø 14 x 30/6 IR	A96ZN00036	Spring Ø 1,5 x Ø 14 x 30/6 IR
38	A96ZF00009	Pin diam. 3,2 IR	A96ZF00009	Pin diam. 3,2 IR
39	A96ZB00001	Side safety panel IR 17	A96ZB00008	Side safety panel IR 22
41	A96ZF00011	Steel Foot M12 IF/IR	A96ZF00011	Steel Foot M12 IF/IR
42	A96ZF00019	Insert for plastic foot IF/IR	A96ZF00019	Insert for plastic foot IF/IR
43	A96ZG00003	Wheel with brake M12 IF/IR	A96ZG00003	Wheel with brake M12 IF/IR
44	A87MR56010	Motor 400 V - 0,75 kW - 50 Hz 80 B14 IF/IR17/22 + IF/IR17/22 VS PF30-33	A87MR56010	Motor 400 V - 0,75 kW - 50 Hz 80 B14 IF/IR17/22 + IF/IR17/22 VS PF30-33
45	A96ZC00002	Cover IF/IR 17/22 (red)	A96ZC00002	Cover IF/IR 17/22 (red)
47	A96ZD00002	Ring in nylon IF/IR	A96ZD00002	Ring in nylon IF/IR
48	A86ME24119	Screw M4x30 TF÷TR	A86ME24119	Screw M4x30 TF÷TR
49	A96ZF00018	Gas spring IR	A96ZF00018	Gas spring IR

50	A96ZN00042	Micro-switch IR	A96ZN00042	Micro-switch IR
51	A96ZI00026	Head rotation shaft IR 17/22	A96ZI00026	Head rotation shaft IR 17/22
52	A96ZF00007	Axis cover IR	A96ZF00007	Axis cover IR
54	A96ZG00004	Wheel without brake M12 IF/IR	A96ZG00004	Wheel without brake M12 IF/IR
55	A96ZN00064	Contactor CN-6/4A 24 V IF/IR - SA300	A96ZN00064	Contactor CN-6/4A 24 V IF/IR - SA300
57	A96ZN00031	Emergency stop switch IF/IR	A96ZN00031	Emergency stop switch IF/IR
58	A96ZL00010	Reduction gear fixing ring IF/IR 17/22	A96ZL00010	Reduction gear fixing ring IF/IR 17/22
60	A86ME32014	Screw M8x40 TF÷TR	A86ME32014	Screw M8x40 TF÷TR
61	A96ZL00008	Gear box CM050 80 B14 1/30 FLS IF/R 17/22	A96ZL00008	Gear box CM050 80 B14 1/30 FLS IF/R 17/22
62	A86ME24118	Screw M5x10 TF÷TR	A86ME24118	Screw M5x10 TF÷TR
63	S40PS67003	Back panel TR 17÷22 (red colour)	S40PS67003	Back panel TR 17÷22 (red colour)
64	A96ZN00040	Transformer 230V/24V single-phase IFM/IRM	A96ZN00040	Transformer 230V/24V single-phase IFM/IRM
65	A96ZN00043	Main switch IFM/IRM/IF VS/IR VS	A96ZN00043	Main switch IFM/IRM/IF VS/IR VS
66	A96ZC00013	Front oblique switch panel IF 17/22	A96ZC00013	Front oblique switch panel IF 17/22
67	A96ZN00032	Starting button IF/IR	A96ZN00032	Starting button IF/IR
68	A96ZM00002	Timer 0-30 min. IF/IR	A96ZM00002	Timer 0-30 min. IF/IR
69	S14MT67012	Spiral chain 06B/94 TF÷TR 17VS	S14MT67013	Spiral chain 06B/90 TF÷TR 22VS
70	A96ZH00013	Chain pinion gear z=40 06B	A96ZH00013	Chain pinion gear z=40 06B
71	A96ZN00028	Ball bearing base IR 17/22	A96ZN00028	Ball bearing base IR 17/22
72	A86ME26027	S.steel washer Ø 10 TF÷TR	A86ME26027	S.steel washer Ø 10 TF÷TR
73	A86ME26026	S.steel washer spring Ø 10 TF÷TR	A86ME26026	S.steel washer spring Ø 10 TF÷TR
74	A86ME24125	Screw TE M10x35 INOX TF÷TR	A86ME24125	Screw TE M10x35 INOX TF÷TR
75	A96ZI00020	Connecting shaft IR 17/22	A96ZI00020	Connecting shaft IR 17/22
76	A86ME36006	Key 6X6X30	A86ME36006	Key 6X6X30
77	A96ZN00027	Connecting pin Ø 10x50 IR	A96ZN00027	Connecting pin Ø 10x50 IR
78	A96ZT00001	Transmission coupling IR 17/22	A96ZT00001	Transmission coupling IR 17/22
79	A86ME25024	Nut M10 ZN	A86ME25024	Nut M10 ZN
80	A96ZI00024	Transmission shaft base UCF 204 IF 17/22 - IR 17/22	A96ZI00024	Transmission shaft base UCF 204 IF 17/22 - IR 17/22
81	A96ZH00009	Chain pinion gear z=16 06B	A96ZH00009	Chain pinion gear z=16 06B
82	A86ME36006	Key 6X6X30	A86ME36006	Key 6X6X30
83	A96ZI00017	Transmission shaft IR 17/22	A96ZI00017	Transmission shaft IR 17/22
84	A86ME36007	Key 8x7x35 TF÷TR	A86ME36007	Key 8x7x35 TF÷TR
92	S69IV67001	Bowls peg TR	S69IV67001	Bowls peg TR
93	S42PL00002	SPIRAL PLATE TF÷TR 17÷22	S42PL00002	SPIRAL PLATE TF÷TR 17÷22
94	A96ZD00003	O-ring diam. 20x2,5 IR	A96ZD00003	O-ring diam. 20x2,5 IR
95	A96ZN00057	Proximity micro L=45 mm TR 17÷22	A96ZN00057	Proximity micro L=45 mm TR 17÷22
96	A86ME25026	Nut M12 ZN	A86ME25026	Nut M12 ZN
97	A96ZN00053	Nylon block base IF/IR	A96ZN00053	Nylon block base IF/IR
98	A86ME25018	Nut M5 ZN	A86ME25018	Nut M5 ZN
99	A96ZN00052	Tensioner base IF/IR	A96ZN00052	Tensioner base IF/IR
100	A86ME24122	Screw TCEI M5x30 TF÷TR	A86ME24122	Screw TCEI M5x30 TF÷TR
101	A96ZN00054	Nylon block	A96ZN00054	Nylon block
102	A86ME24124	Screw TCEI M10x25 TR	A86ME24124	Screw TCEI M10x25 TR
103	A96ZF00012	Head closing hook	A96ZF00012	Head closing hook

104	A86ME25019	Nut M8 ZN	A86ME25019	Nut M8 ZN
105	A96ZV00027	Bowl chain tensioner part IF/IR 17/22	A96ZV00027	Bowl chain tensioner part IF/IR 17/22
106	A96ZN00055	Control card 230/ 400 V IF/IR/IFM/IRM 17/22/33/42/53	A96ZN00055	Control card 230/ 400 V IF/IR/IFM/IRM 17/22/33/42/53
121	A88IY00001	Inverter Telemecanique	A88IY00001	Inverter Telemecanique
122	A96ZF00021	Fixing support inverter IR 17/22 VS	A96ZF00021	Fixing support inverter IR 17/22 VS
123	A96ZF00013	Red frame IF/IR 17/22	A96ZF00013	Red frame IF/IR 17/22
124	A96ZN00084	Potentiometer 10K FOR INVERTER	A96ZN00084	Potentiometer 10K FOR INVERTER

Pos.	IR33 VS	DESCRIPTION	IR42 VS	DESCRIPTION
1	A96ZE00009	Safety guard IF/IR 33	A96ZE00010	Safety guard IF/IR 42
2	A96ZV00017	Bowl IF/IR 33	A96ZV00018	Bowl IF/IR 42
3	A96ZV00020	Bowl flange IR	A96ZV00020	Bowl flange IR
4	A96ZV00022	Plate block bowl IR 33	A96ZV00023	Plate block bowl IR 42
5	A96ZD00001	Snap ring diam. 25 IF/IR	A96ZD00001	Snap ring diam. 25 IF/IR
6	A89CK00010	Bearing 6205-2RS TF÷TR	A89CK00010	Bearing 6205-2RS TF÷TR
7	A96ZV00025	Support bowl base IF/IR 17/22/33/42/53	A96ZV00025	Support bowl base IF/IR 17/22/33/42/53
8	S14MT67015	Bowl chain 06B/130 TF÷TR 33-42-53VS	S14MT67015	Bowl chain 06B/130 TF÷TR 33-42-53VS
9	A96ZN00066	Chain wheel z=58 06B	A96ZN00066	Chain wheel z=58 06B
10	A96ZI00013	Bowl support axle IF/IR 17/22/33/42/53	A96ZI00013	Bowl support axle IF/IR 17/22/33/42/53
11	A86ME24121	Screw M8x60 TF	A86ME24121	Screw M8x60 TF
12	A96ZE00013	Guard ring IR	A96ZE00013	Guard ring IR
13	S63FS67001	Safety guard pin TF/TR 33/42/53	S63FS67001	Safety guard pin TF/TR 33/42/53
14	A96ZE00014	Cam for safety guard IR	A96ZE00014	Cam for safety guard IR
15	A86ME32013	Screw M8x10 TF÷TR	A86ME32013	Screw M8x10 TF÷TR
16	A86ME24116	Screw M8x25 TF÷TR	A86ME24116	Screw M8x25 TF÷TR
17	A86ME26024	S.steel washer grover Ø 8,5 TF÷TR	A86ME26024	S.steel washer grover Ø 8,5 TF÷TR
18	A86ME26025	S.Steel washer Ø8 TF÷TR	A86ME26025	S.Steel washer Ø8 TF÷TR
19	A96ZH00014	Chain pinion gear z=16 08B	A96ZH00014	Chain pinion gear z=16 08B
20	A96ZS00007	Spiral support IF/IR 33/42/53	A96ZS00007	Spiral support IF/IR 33/42/53
21	A86ME24114	Screw M8x30	A86ME24114	Screw M8x30
22	A89CK00010	Bearing 6205-2RS TF÷TR	A89CK00010	Bearing 6205-2RS TF÷TR
22.01	A89CK00011	Bearing 6006-2RS IF÷IR 33÷42÷53	A89CK00011	Bearing 6006-2RS IF÷IR 33÷42÷53
23	A86ME36009	Key 6x6x35 TF÷TR 33÷42÷53	A86ME36009	Key 6x6x35 TF÷TR 33÷42÷53
24	A96ZI00016	Axle for spiral base IF/IR 33/42/53	A96ZI00016	Axle for spiral base IF/IR 33/42/53
25	A96ZS00005	Spiral IF/IR 33/42/53	A96ZS00005	Spiral IF/IR 33/42/53
26	A96ZN00024	Distance sensor with two cables "NO" IR/IR 2V	A96ZN00024	Distance sensor with two cables "NO" IR/IR 2V
27	A96ZN00025	Wire clip IF/IR	A96ZN00025	Wire clip IF/IR
28	A96ZN00026	Supply wire IF/IR 17/22/33/42/53	A96ZN00026	Supply wire IF/IR 17/22/33/42/53
31	A96ZF00004	Pivot for fixing spring IR 33/42/53	A96ZF00004	Pivot for fixing spring IR 33/42/53
32	A86ME30008	Spring diam. 1,2 x diam. 8,5 x 20/13 IR	A86ME30008	Spring diam. 1,2 x diam. 8,5 x 20/13 IR
33	A96ZA00002	Rod breaking dough IF/IR 33	A96ZA00003	Rod breaking dough IF/IR 42
34	A86ME24117	Screw M10x25 TF÷TR	A86ME24117	Screw M10x25 TF÷TR
35	A96ZF00008	Head closing knob IR	A96ZF00008	Head closing knob IR
36	A96ZI00029	Closing handle axle IR 33/42/53	A96ZI00029	Closing handle axle IR 33/42/53
37	A96ZN00036	Spring Ø 1,5 x Ø 14 x 30/6 IR	A96ZN00036	Spring Ø 1,5 x Ø 14 x 30/6 IR
38	A96ZF00009	Pin diam. 3,2 IR	A96ZF00009	Pin diam. 3,2 IR
39	A96ZB00002	Side safety panel IR 33	A96ZB00003	Side safety panel IR 42
41	A96ZF00011	Steel Foot M12 IF/IR	A96ZF00011	Steel Foot M12 IF/IR
42	A96ZF00019	Insert for plastic foot IF/IR	A96ZF00019	Insert for plastic foot IF/IR
43	A96ZG00003	Wheel with brake M12 IF/IR	A96ZG00003	Wheel with brake M12 IF/IR
44	A96ZJ00024	Motor 400 V -1,5 kW - 50 Hz 90 B14 IF/IR 33/42/53 + IF/IR 33/42/53VS	A96ZJ00024	Motor 400 V -1,5 kW - 50 Hz 90 B14 IF/IR 33/42/53 + IF/IR 33/42/53VS
45	A96ZC00004	Cover IF/IR 33/42/53 (red)	A96ZC00004	Cover IF/IR 33/42/53 (red)
47	A96ZD00002	Ring in nylon IF/IR	A96ZD00002	Ring in nylon IF/IR
48	A86ME24119	Screw M4x30 TF÷TR	A86ME24119	Screw M4x30 TF÷TR

49	A96ZF00018	Gas spring IR	A96ZF00018	Gas spring IR
50	A96ZN00042	Micro-switch IR	A96ZN00042	Micro-switch IR
51	A96ZI00026	Head rotation shaft IR 17/22	A96ZI00026	Head rotation shaft IR 17/22
52	A96ZF00007	Axis cover IR	A96ZF00007	Axis cover IR
54	A96ZG00004	Wheel without brake M12 IF/IR	A96ZG00004	Wheel without brake M12 IF/IR
55	A96ZN00064	Contactor CN-6/4A 24 V IF/IR - SA300	A96ZN00064	Contactor CN-6/4A 24 V IF/IR - SA300
57	A96ZN00031	Emergency stop switch IF/IR	A96ZN00031	Emergency stop switch IF/IR
58	A96ZL00018	Flange fixing gear box TF÷TR 33	A96ZL00011	Ring fixing reduction gear IF/IR 33/42/53
60	A86ME32014	Screw M8x40 TF÷TR	A86ME32014	Screw M8x40 TF÷TR
61	A96ZL00015	Gear box CM63 90 B14 1/30 FLS IF/IR 33/42/53	A96ZL00015	Gear box CM63 90 B14 1/30 FLS IF/IR 33/42/53
62	A86ME24118	Screw M5x10 TF÷TR	A86ME24118	Screw M5x10 TF÷TR
63	S40PS67004	Back panel TR 33÷42÷53 (red colour)	S40PS67004	Back panel TR 33÷42÷53 (red colour)
64	A96ZN00040	Transformer 230V/24V single-phase IFM/IRM	A96ZN00040	Transformer 230V/24V single-phase IFM/IRM
65	A96ZN00043	Main switch IFM/IRM/IF VS/IR VS	A96ZN00043	Main switch IFM/IRM/IF VS/IR VS
66	A96ZC00014	Front oblique switch panel IF 33/42/53	A96ZC00014	Front oblique switch panel IF 33/42/53
67	A96ZN00032	Starting button IF/IR	A96ZN00032	Starting button IF/IR
68	A96ZM00002	Timer 0-30 min. IF/IR	A96ZM00002	Timer 0-30 min. IF/IR
69	S14MT67010	Bowl chain 08B/80 TF÷TR 33VS	S14MT67011	Spiral chain 08B/76 TF÷TR 42VS
70	A96ZH00015	Chain pinion gear z=40 08B	A96ZH00015	Chain pinion gear z=40 08B
71	A96ZN00029	Ball bearing base IR 33/42/53	A96ZN00029	Ball bearing base IR 33/42/53
72	A86ME26027	S.steel washer Ø 10 TF÷TR	A86ME26027	S.steel washer Ø 10 TF÷TR
73	A86ME26026	S.steel washer spring Ø 10 TF÷TR	A86ME26026	S.steel washer spring Ø 10 TF÷TR
74	A86ME24125	Screw TE M10x35 INOX TF÷TR	A86ME24125	Screw TE M10x35 INOX TF÷TR
75	A96ZI00021	Connecting shaft IR 33/42/53	A96ZI00021	Connecting shaft IR 33/42/53
76	A86ME36006	Key 6X6X30	A86ME36006	Key 6X6X30
77	A96ZN00027	Connecting pin Ø 10x50 IR	A96ZN00027	Connecting pin Ø 10x50 IR
78	A96ZT00002	Transmission joint IR 33/42/53	A96ZT00002	Transmission joint IR 33/42/53
79	A86ME25024	Nut M10 ZN	A86ME25024	Nut M10 ZN
80	A96ZI00025	Transmission shaft base UCF 205 IF 33/42/53 - IR 33/42/53	A96ZI00025	Transmission shaft base UCF 205 IF 33/42/53 - IR 33/42/53
81	A96ZH00009	Chain pinion gear z=16 06B	A96ZH00009	Chain pinion gear z=16 06B
82	A86ME36006	Key 6X6X30	A86ME36006	Key 6X6X30
83	A96ZI00018	Transmission shaft IR 33	A96ZI00033	Transmission shaft IR 42/53
84	A86ME36007	Key 8x7x35 TF÷TR	A86ME36007	Key 8x7x35 TF÷TR
92	S69IV67001	Bowls peg TR	S69IV67001	Bowls peg TR
93	A96ZS00009	SPIRAL PLATE TF÷TR 33÷42÷53	A96ZS00009	SPIRAL PLATE TF÷TR 33÷42÷53
94	A96ZD00003	O-ring diam. 20x2,5 IR	A96ZD00003	O-ring diam. 20x2,5 IR
95	A96ZN00058	Proximity micro L=75 mm IR 17/22/33/42/53	A96ZN00058	Proximity micro L=75 mm IR 17/22/33/42/53
96	A86ME25026	Nut M12 ZN	A86ME25026	Nut M12 ZN
97	A96ZN00053	Nylon block base IF/IR	A96ZN00053	Nylon block base IF/IR
98	A86ME25018	Nut M5 ZN	A86ME25018	Nut M5 ZN
99	A96ZN00052	Tensioner base IF/IR	A96ZN00052	Tensioner base IF/IR
100	A86ME24122	Screw TCEI M5x30 TF÷TR	A86ME24122	Screw TCEI M5x30 TF÷TR
101	A96ZN00054	Nylon block	A96ZN00054	Nylon block
102	A86ME24124	Screw TCEI M10x25 TR	A86ME24124	Screw TCEI M10x25 TR
103	A96ZF00012	Head closing hook	A96ZF00012	Head closing hook
104	A86ME25019	Nut M8 ZN	A86ME25019	Nut M8 ZN
105	A96ZV00027	Bowl chain tensioner part IF/IR	A96ZV00028	Bowl chain tensioner part IF/IR

		17/22		33/42/53
106	A96ZN00055	Control card 230/ 400 V IF/IR/IFM/IRM 17/22/33/42/53	A96ZN00055	Control card 230/ 400 V IF/IR/IFM/IRM 17/22/33/42/53
121	A88IY00002	TELEMECANIQUE INVERTER ATV12HU15M2 1.5 Kw 200/240V 50/60Hz	A88IY00002	TELEMECANIQUE INVERTER ATV12HU15M2 1.5 Kw 200/240V 50/60Hz
122	A96ZF00022	Fixing support inverter IR 33/42/53 VS	A96ZF00022	Fixing support inverter IR 33/42/53 VS
123	A96ZF00014	Red frame IF/IR 33/42/53	A96ZF00014	Red frame IF/IR 33/42/53
124	A96ZN00084	Potentiometer 10K FOR INVERTER	A96ZN00084	Potentiometer 10K FOR INVERTER

Pos.	IR53 VS	DESCRIPTION
1	A96ZE00011	Safety guard IF/IR 53
2	A96ZV00019	Bowl IF/IR 53
3	A96ZV00020	Bowl flange IR
4	A96ZV00024	Plate block bowl IR 33
5	A96ZD00001	Snap ring diam. 25 IF/IR
6	A89CK00010	Bearing 6205-2RS TF÷TR
7	A96ZV00025	Support bowl base IF/IR 17/22/33/42/53
8	S14MT67015	Bowl chain 06B/130 TF÷TR 33-42-53VS
9	A96ZN00066	Chain wheel z=58 06B
10	A96ZI00013	Bowl support axle IF/IR 17/22/33/42/53
11	A86ME24121	Screw M8x60 TF
12	A96ZE00013	Guard ring IR
13	S63FS67001	Safety guard pin TF/TR 33/42/53
14	A96ZE00014	Cam for safety guard IR
15	A86ME32013	Screw M8x10 TF÷TR
16	A86ME24116	Screw M8x25 TF÷TR
17	A86ME26024	S.steel washer grover Ø 8,5 TF÷TR
18	A86ME26025	S.Steel washer Ø8 TF÷TR
19	A96ZH00014	Chain pinion gear z=16 08B
20	A96ZS00007	Spiral support IF/IR 33/42/53
21	A86ME24114	Screw M8x30
22	A89CK00010	Bearing 6205-2RS TF÷TR
22.01	A89CK00011	Bearing 6006-2RS IF÷IR 33÷42÷53
23	A86ME36009	Key 6x6x35 TF÷TR 33÷42÷53
24	A96ZI00016	Axle for spiral base IF/IR 33/42/53
25	A96ZS00017	Spiral IF÷IR 53
26	A96ZN00024	Distance sensor with two cables "NO" IR/IR 2V
27	A96ZN00025	Wire clip IF/IR
28	A96ZN00026	Supply wire IF/IR 17/22/33/42/53
31	A96ZF00004	Pivot for fixing spring IR 33/42/53
32	A86ME30008	Spring diam. 1,2 x diam. 8,5 x 20/13 IR
33	A96ZA00004	Rod breaking dough IF/IR 53
34	A86ME24117	Screw M10x25 TF÷TR
35	A96ZF00008	Head closing knob IR
36	A96ZI00029	Closing handle axle IR 33/42/53
37	A96ZN00036	Spring Ø 1,5 x Ø 14 x 30/6 IR
38	A96ZF00009	Pin diam. 3,2 IR
39	A96ZB00004	Side safety panel IR 53
41	A96ZF00011	Steel Foot M12 IF/IR
42	A96ZF00019	Insert for plastic foot IF/IR
43	A96ZG00003	Wheel with brake M12 IF/IR
44	A96ZJ00024	Motor 400 V -1,5 kW - 50 Hz 90 B14 IF/IR 33/42/53 + IF/IR 33/42/53VS
45	A96ZC00004	Cover IF/IR 33/42/53 (red)
47	A96ZD00002	Ring in nylon IF/IR
48	A86ME24119	Screw M4x30 TF÷TR
49	A96ZF00018	Gas spring IR
50	A96ZN00042	Micro-switch IR
51	A96ZI00026	Head rotation shaft IR 17/22
52	A96ZF00007	Axis cover IR
54	A96ZG00004	Wheel without brake M12 IF/IR
55	A96ZN00064	Contactor CN-6/4A 24 V IF/IR - SA300
57	A96ZN00031	Emergency stop switch IF/IR
58	A96ZL00011	Ring fixing reduction gear IF/IR 33/42/53

60	A86ME32014	Screw M8x40 TF÷TR
61	A96ZL00015	Gear box CM63 90 B14 1/30 FLS IF/IR 33/42/53
62	A86ME24118	Screw M5x10 TF÷TR
63	S40PS67004	Back panel TR 33÷42÷53 (red colour)
64	A96ZN00040	Transformer 230V/24V single-phase IFM/IRM
65	A96ZN00043	Main switch IFM/IRM/IF VS/IR VS
66	A96ZC00014	Front oblique switch panel IF 33/42/53
67	A96ZN00032	Starting button IF/IR
68	A96ZM00002	Timer 0-30 min. IF/IR
69	S14MT67018	Spiral chain 08B/76 IF÷IR 53 VS 2013
70	A96ZH00015	Chain pinion gear z=40 08B
71	A96ZN00029	Ball bearing base IR 33/42/53
72	A86ME26027	S.steel washer Ø 10 TF÷TR
73	A86ME26026	S.steel washer spring Ø 10 TF÷TR
74	A86ME24125	Screw TE M10x35 INOX TF÷TR
75	A96ZI00021	Connecting shaft IR 33/42/53
76	A86ME36006	Key 6X6X30
77	A96ZN00027	Connecting pin Ø 10x50 IR
78	A96ZT00002	Transmission joint IR 33/42/53
79	A86ME25024	Nut M10 ZN
80	A96ZI00025	Transmission shaft base UCF 205 IF 33/42/53 - IR 33/42/53
81	A96ZH00009	Chain pinion gear z=16 06B
82	A86ME36006	Key 6X6X30
83	A96ZI00033	Transmission shaft IR 42/53
84	A86ME36007	Key 8x7x35 TF÷TR
92	S69IV67001	Bowls peg TR
93	A96ZS00009	SPIRAL PLATE TF÷TR 33÷42÷53
94	A96ZD00003	O-ring diam. 20x2,5 IR
95	A96ZN00058	Proximity micro L=75 mm IR 17/22/33/42/53
96	A86ME25026	Nut M12 ZN
97	A96ZN00053	Nylon block base IF/IR
98	A86ME25018	Nut M5 ZN
99	A96ZN00052	Tensioner base IF/IR
100	A86ME24122	Screw TCEI M5x30 TF÷TR
101	A96ZN00054	Nylon block
102	A86ME24124	Screw TCEI M10x25 TR
103	A96ZF00012	Head closing hook
104	A86ME25019	Nut M8 ZN
105	A96ZV00028	Bowl chain tensioner part IF/IR 33/42/53
106	A96ZN00055	Control card 230/ 400 V IF/IR/IFM/IRM 17/22/33/42/53
121	A88IY00002	TELEMECANIQUE INVERTER ATV12HU15M2 1.5 Kw 200/240V 50/60Hz
122	A96ZF00022	Fixing support inverter IR 33/42/53 VS
123	A96ZF00014	Red frame IF/IR 33/42/53
124	A96ZN00084	Potentiometer 10K FOR INVERTER

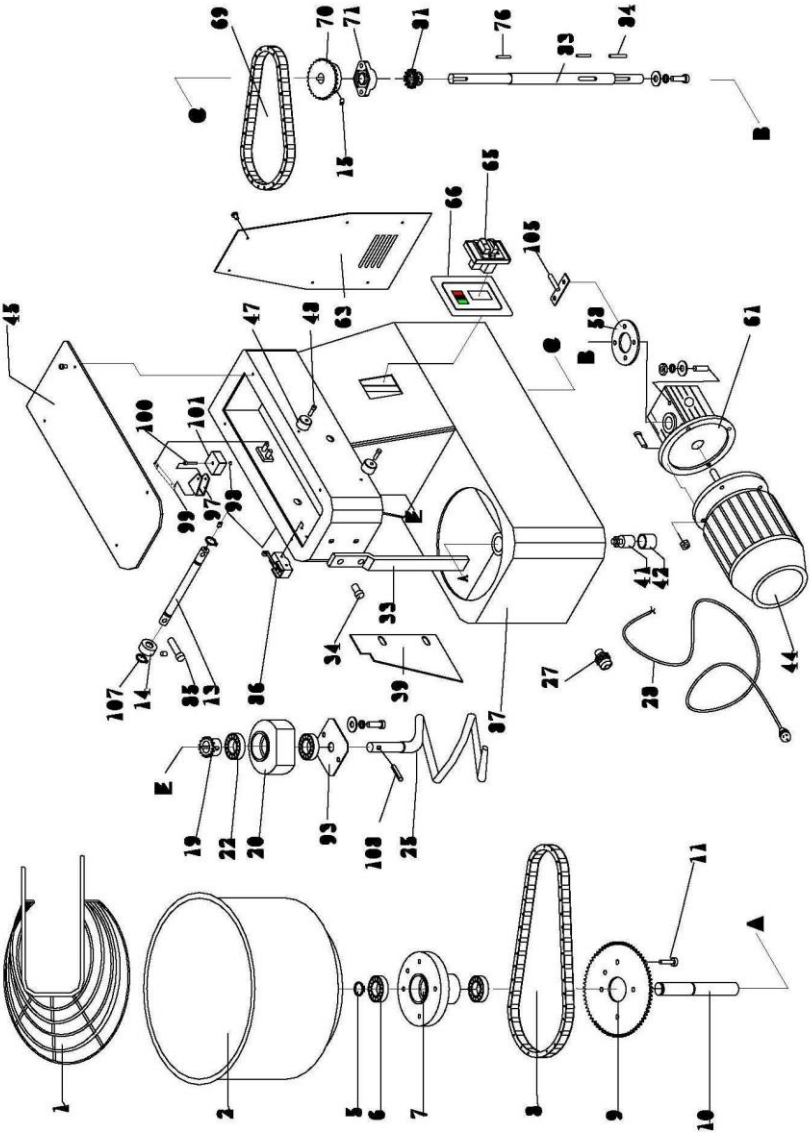

IFME10–IFME15

POS.	IFME10	DESCRIPTION	IFME15	DESCRIPTION
1	A96ZE00022	Safety guard IFM 10	A96ZE00016	Safety guard IFM 15
2	A96ZV00031	Bowl IFM 10	A96ZV00033	Bowl IFM 15
5	A96ZD00001	Snap ring diam. 25 IF/IR	A96ZD00001	Snap ring diam. 25 IF/IR
6	A89CK00012	Bearing 6204-2RS TFM 7÷10÷15	A89CK00012	Bearing 6204-2RS TFM 7÷10÷15
7	A96ZV00035	Support bowl base IFM 7/10/15	A96ZV00035	Support bowl base IFM 7/10/15
8	A96ZN00061	Bowl chain 06B/102 TFM 7÷10÷15	A96ZN00061	Bowl chain 06B/102 TFM 7÷10÷15
9	A96ZN00062	Chain wheel z=50 06B IFM 7/10/15	A96ZN00062	Chain wheel z=50 06B IFM 7/10/15
10	A96ZI00034	Bowl base shaft IFM 7/10/15	A96ZI00034	Bowl base shaft IFM 7/10/15
11	A86ME24115	Screw M8x35 TF÷TR	A86ME24115	Screw M8x35 TF÷TR
13	S63FS67002	Safety guard pin IFM 7/10/15	S63FS67002	Safety guard pin IFM 7/10/15
14	A96ZE00012	Cam for safety guard IF	A96ZE00012	Cam for safety guard IF
15	A86ME32013	Screw M8x10 TF÷TR	A86ME32013	Screw M8x10 TF÷TR
19	A96ZH00016	Chain pinion gear z=11 06B IFM 7/10/15	A96ZH00016	Chain pinion gear z=11 06B IFM 7/10/15
20	A96ZS00014	Spiral base IFM 7/10/15	A96ZS00014	Spiral base IFM 7/10/15
22	A89CK00013	Bearing 6202-2RS TFM 7÷10÷15	A89CK00013	Bearing 6202-2RS TFM 7÷10÷15
25	A96ZS00012	Spiral IFM 10/15	A96ZS00012	Spiral IFM 10/15
27	A96ZN00025	Wire clip IF/IR	A96ZN00025	Wire clip IF/IR
28	A96ZN00047	Feed cable IFM/IRM	A96ZN00047	Feed cable IFM/IRM
33	A96ZA00007	Rod breaking dough IFM10	A96ZA00008	Rod breaking dough IFM 15
34	A86ME24016	Screw TE M6X25 ZN	A86ME24016	Screw TE M6X25 ZN
39	A96ZB00011	Side safety panel IFM 10	A96ZB00010	Side safety panel IFM 15
41	A96ZF00011	Steel Foot M12 IF/IR	A96ZF00011	Steel Foot M12 IF/IR
42	A96ZF00019	Insert for plastic foot IF/IR	A96ZF00019	Insert for plastic foot IF/IR
43	A96ZG00003	Wheel with brake M12 IF/IR	A96ZG00003	Wheel with brake M12 IF/IR
44	A96ZJ00020	Motor 230 V - 0,37 kW - 50 Hz - 71 - B14 - IFM 10/15	A96ZJ00020	Motor 230 V - 0,37 kW - 50 Hz - 71 - B14 - IFM 10/15
45	A96ZC00010	Upper panel IFM 7	A96ZC00010	Upper panel IFM 7
47	A96ZD00002	Ring in nylon IF/IR	A96ZD00002	Ring in nylon IF/IR
48	A86ME24119	Screw M4x30 TF÷TR	A86ME24119	Screw M4x30 TF÷TR
54	A96ZG00004	Wheel without brake M12 IF/IR	A96ZG00004	Wheel without brake M12 IF/IR
58	A96ZL00014	Flange fixing reductor TFM 10÷15	A96ZL00014	Flange fixing reductor TFM 10÷15
61	A96ZL00019	Gear box 71 B14 1/40 IFM 10/15	A96ZL00019	Gear box 71 B14 1/40 IFM 10/15
63	A96ZC00012	Back panel IFM 10/15	A96ZC00012	Back panel IFM 10/15
65	A87AZ68006	Start/stop black/white button KJD17 IFE%IRE 7/10/15	A87AZ68006	Start/stop black/white button KJD17 IFE%IRE 7/10/15
69	S14MT67005	Spiral chain 06B/74 TFM 10	S14MT67005	Spiral chain 06B/74 TFM 10
70	A96ZH00012	Chain pinion gear z=23 06B IFM 7/10/15	A96ZH00012	Chain pinion gear z=23 06B IFM 7/10/15
71	A96ZI00035	Base transmission shaft UCFL 204 IFM 7/10/15	A96ZI00035	Base transmission shaft UCFL 204 IFM 7/10/15
76	A86ME36006	Key 6X6X30	A86ME36006	Key 6X6X30
81	A96ZH00008	Chain pinion gear z=14 06B TF/TR 17/22	A96ZH00008	Chain pinion gear z=14 06B TF/TR 17/22
83	A96ZI00037	Transmission shaft IFM 10/15	A96ZI00037	Transmission shaft IFM 10/15
84	A86ME36011	Key 6x6x40 TFM 7÷10÷15	A86ME36011	Key 6x6x40 TFM 7÷10÷15
86	A96ZN00030	Micro-switch IF	A96ZN00030	Micro-switch IF
93	S42PL00001	Spiral plate TFM 7÷10÷15	S42PL00001	Spiral plate TFM 7÷10÷15
97	A96ZN00053	Nylon block base IF/IR	A96ZN00053	Nylon block base IF/IR
98	A86ME25018	Nut M5 ZN	A86ME25018	Nut M5 ZN
99	A96ZN00052	Tensioner base IF/IR	A96ZN00052	Tensioner base IF/IR
100	A86ME24122	Screw TCEI M5x30 TF÷TR	A86ME24122	Screw TCEI M5x30 TF÷TR
101	A96ZN00054	Nylon block	A96ZN00054	Nylon block
105	A96ZV00032	Bowl chain tensioner part IFM 10/15	A96ZV00032	Bowl chain tensioner part IFM 10/15

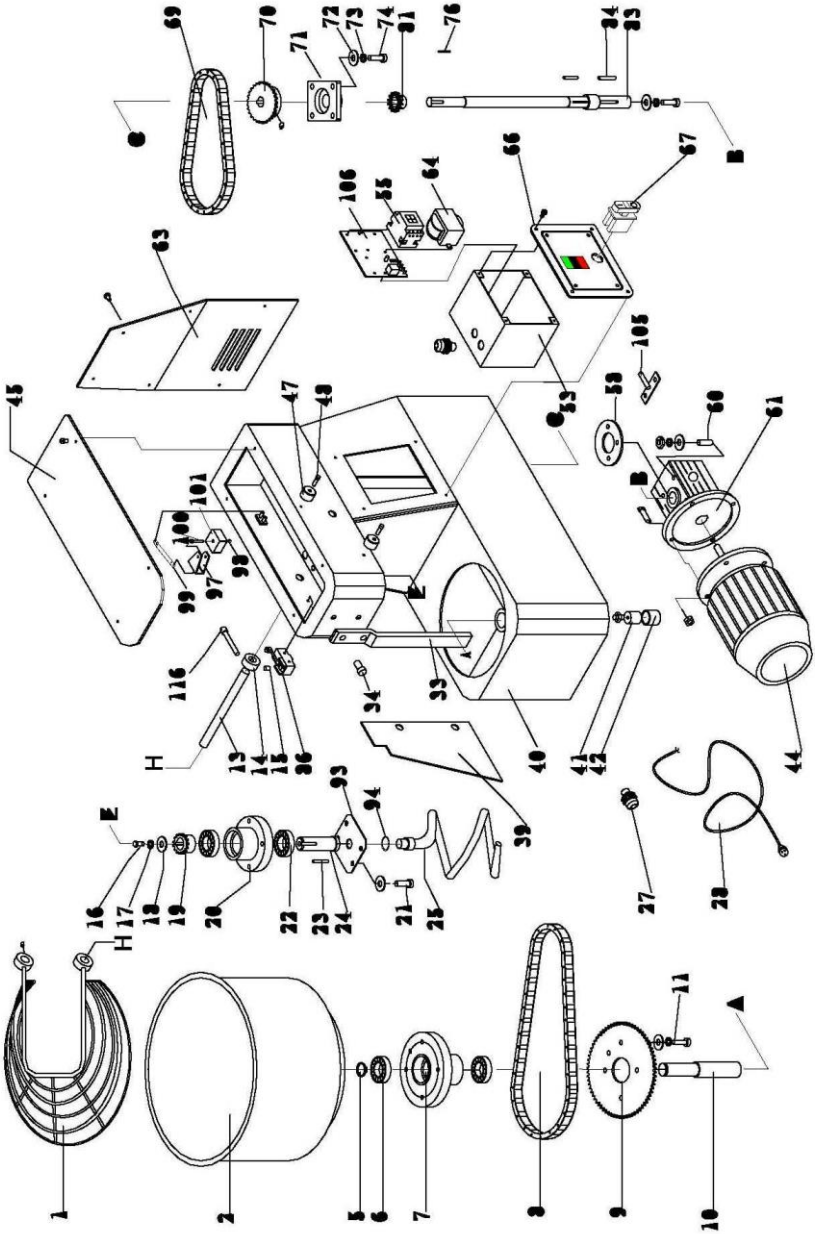

IFE17-IFE22-IFE33-IFE42-IFE53-IFME17-IFME22-IFME33

Pos.	IFE 17	DESCRIPTION	IFE 22	DESCRIPTION
1	A96ZE00007	Safety guard IF/IR 17	A96ZE00008	Safety guard IF/IR 22
2	A96ZV00015	Bowl IF/IR 17	A96ZV00016	Bowl IF/IR 22
5	A96ZD00001	Snap ring diam. 25 IF/IR	A96ZD00001	Snap ring diam. 25 IF/IR
6	A89CK00010	Bearing 6205-2RS TF÷TR	A89CK00010	Bearing 6205-2RS TF÷TR
7	A96ZV00025	Support bowl base IF/IR 17/22/33/42/53	A96ZV00025	Support bowl base IF/IR 17/22/33/42/53
8	S14MT67007	Bowl chain 06B/126 IF÷IR 17÷22	S14MT67007	Bowl chain 06B/126 IF÷IR 17÷22
9	A96ZR00004	Crown z=72 06B IF/IR 17/22	A96ZR00004	Crown z=72 06B IF/IR 17/22
10	A96ZI00013	Bowl support axle IF/IR 17/22/33/42/53	A96ZI00013	Bowl support axle IF/IR 17/22/33/42/53
11	A86ME24115	Screw M8x35 TF÷TR	A86ME24115	Screw M8x35 TF÷TR
13	A96ZI00014	Safety guard pin IF/IR 17/22	A96ZI00014	Safety guard pin IF/IR 17/22
14	A96ZE00012	Cam for safety guard IF	A96ZE00012	Cam for safety guard IF
15	A86ME32013	Screw M8x10 TF÷TR	A86ME32013	Screw M8x10 TF÷TR
16	A86ME24116	Screw M8x25 TF÷TR	A86ME24116	Screw M8x25 TF÷TR
17	A86ME26024	S.steel washer grover Ø 8,5 TF÷TR	A86ME26024	S.steel washer grover Ø 8,5 TF÷TR
18	A86ME26025	S.Steel washer Ø8 TF÷TR	A86ME26025	S.Steel washer Ø8 TF÷TR
19	A96ZH00006	Pinion gear z=15 06B IF/IR 17/22	A96ZH00006	Pinion gear z=15 06B IF/IR 17/22
20	A96ZS00006	Spiral support IF/IF 17/22	A96ZS00006	Spiral support IF/IF 17/22
21	A86ME24114	Screw M8x30	A86ME24114	Screw M8x30
22	A89CK00010	Bearing 6205-2RS TF÷TR	A89CK00010	Bearing 6205-2RS TF÷TR
23	A86ME36008	Key 6x6x20 TF÷TR 17÷22	A86ME36008	Key 6x6x20 TF÷TR 17÷22
24	A96ZI00015	Axle for spiral base IF/IR 17/22	A96ZI00015	Axle for spiral base IF/IR 17/22
25	A96ZS00004	Spiral IF/IR 17/22	A96ZS00004	Spiral IF/IR 17/22
27	A96ZN00025	Wire clip IF/IR	A96ZN00025	Wire clip IF/IR
28	A96ZN00026	Supply wire IF/IR 17/22/33/42/53	A96ZN00026	Supply wire IF/IR 17/22/33/42/53
33	A96ZA00001	Dough breaking rod IF/IR 17	A96ZA00005	Rod breaking dough IF/IR 22
34	A86ME24117	Screw M10x25 TF÷TR	A86ME24117	Screw M10x25 TF÷TR
39	A96ZB00006	Side safety panel IF 17	A96ZB00012	Side safety panel IF 22
41	A96ZF00011	Steel Foot M12 IF/IR	A96ZF00011	Steel Foot M12 IF/IR
42	A96ZF00019	Insert for plastic foot IF/IR	A96ZF00019	Insert for plastic foot IF/IR
44	A87MR56010	Motor 400 V - 0,75 kW - 50 Hz 80 B14 IF/IR17/22 + IF/IR17/22 VS PF30-33	A87MR56010	Motor 400 V - 0,75 kW - 50 Hz 80 B14 IF/IR17/22 + IF/IR17/22 VS PF30-33
45	A96ZC00001	Cover IF/IR 17/22 (white)	A96ZC00001	Cover IF/IR 17/22 (white)
47	A96ZD00002	Ring in nylon IF/IR	A96ZD00002	Ring in nylon IF/IR
48	A86ME24033	Screw TCEI M4X30 ZN	A86ME24033	Screw TCEI M4X30 ZN
53	A96ZO00009	Control box IFE/IRE	A96ZO00009	Control box IFE/IRE
55	A96ZN00064	Contactor CN-6/4A 24 V IF/IR - SA300	A96ZN00064	Contactor CN-6/4A 24 V IF/IR - SA300
58	A96ZL00010	Reduction gear fixing ring IF/IR 17/22	A96ZL00010	Reduction gear fixing ring IF/IR 17/22
60	A86ME32015	Screw M8x10 TF÷TR	A86ME32015	Screw M8x10 TF÷TR
61	A96ZL00008	Gear box CM050 80 B14 1/30 FLS IF/R 17/22	A96ZL00008	Gear box CM050 80 B14 1/30 FLS IF/R 17/22
63	A96ZC00026	REAR PANEL TF 17÷22 (WHITE)	A96ZC00026	REAR PANEL TF 17÷22 (WHITE)
64	A96ZN00040	Transformer 230V/24V single-phase IFM/IRM	A96ZN00040	Transformer 230V/24V single-phase IFM/IRM
66	A96ZC00025	Black switch panel with Italian flag IFE/IRE	A96ZC00025	Black switch panel with Italian flag IFE/IRE
67	A96ZN00089	Complete black/white switch	A96ZN00089	Complete black/white switch
69	S14MT67001	Chain for Spiral 06B/86	S14MT67001	Chain for Spiral 06B/86

		TF÷TR 17		TF÷TR 17
70	A96ZH00010	Chain pinion gear z=29 06B IF/IR 17/22	A96ZH00010	Chain pinion gear z=29 06B IF/IR 17/22
71	A96ZI00024	Transmission shaft base UCF 204 IF 17/22 - IR 17/22	A96ZI00024	Transmission shaft base UCF 204 IF 17/22 - IR 17/22
72	A86ME26027	S.steel washer Ø 10 TF÷TR	A86ME26027	S.steel washer Ø 10 TF÷TR
73	A86ME26026	S.steel washer spring Ø 10 TF÷TR	A86ME26026	S.steel washer spring Ø 10 TF÷TR
74	A86ME24120	Screw M10x35 TF÷TR	A86ME24120	Screw M10x35 TF÷TR
76	A86ME36006	Key 6X6X30	A86ME36006	Key 6X6X30
81	A96ZH00008	Chain pinion gear z=14 06B TF/TR 17/22	A96ZH00008	Chain pinion gear z=14 06B TF/TR 17/22
83	A96ZI00030	Transmission shaft TF 17-22 "2008"	A96ZI00030	Transmission shaft TF 17-22 "2008"
84	A86ME36004	Key 8X7X50	A86ME36004	Key 8X7X50
86	A96ZN00030	Micro-switch IF	A96ZN00030	Micro-switch IF
93	S42PL00002	SPIRAL PLATE TF÷TR 17÷22	S42PL00002	SPIRAL PLATE TF÷TR 17÷22
94	A96ZD00003	O-ring diam. 20x2,5 IR	A96ZD00003	O-ring diam. 20x2,5 IR
97	A96ZN00053	Nylon block base IF/IR	A96ZN00053	Nylon block base IF/IR
98	A86ME25018	Nut M5 ZN	A86ME25018	Nut M5 ZN
99	A96ZN00052	Tensioner base IF/IR	A96ZN00052	Tensioner base IF/IR
100	A86ME24122	Screw TCEI M5x30 TF÷TR	A86ME24122	Screw TCEI M5x30 TF÷TR
101	A96ZN00054	Nylon block	A96ZN00054	Nylon block
105	A96ZV00027	Bowl chain tensioner part IF/IR 17/22	A96ZV00027	Bowl chain tensioner part IF/IR 17/22
106	A96ZN00055	Control card 230/ 400 V IF/IR/IFM/IRM 17/22/33/42/53	A96ZN00055	Control card 230/ 400 V IF/IR/IFM/IRM 17/22/33/42/53
Pos.	**IFME 17**	**DESCRIPTION**	**IFME 22**	**DESCRIPTION**
44	A87MR56008	Motor 220V-0,75 kW-50 Hz TFM÷TRM 17÷22	A87MR56008	Motor 220V-0,75 kW-50 Hz TFM÷TRM 17÷22
61	A96ZL00008	Gear box CM050 80 B14 1/30 FLS IF/R 17/22	A96ZL00008	Gear box CM050 80 B14 1/30 FLS IF/R 17/22

Pos.	IFE 33	DESCRIPTION	IFE 42	DESCRIPTION
1	A96ZE00009	Safety guard IF/IR 33	A96ZE00010	Safety guard IF/IR 42
2	A96ZV00017	Bowl IF/IR 33	A96ZV00018	Bowl IF/IR 42
5	A96ZD00001	Snap ring diam. 25 IF/IR	A96ZD00001	Snap ring diam. 25 IF/IR
6	A89CK00010	Bearing 6205-2RS TF÷TR	A89CK00010	Bearing 6205-2RS TF÷TR
7	A96ZV00025	Support bowl base IF/IR 17/22/33/42/53	A96ZV00025	Support bowl base IF/IR 17/22/33/42/53
8	S14MT67008	Bowl spiral 06B/144 TF÷TR 33÷42÷53	S14MT67008	Bowl spiral 06B/144 TF÷TR 33÷42÷53
9	A96ZR00005	Crown z=85 06B IF/IR 33/42/53	A96ZR00005	Crown z=85 06B IF/IR 33/42/53
10	A96ZI00013	Bowl support axle IF/IR 17/22/33/42/53	A96ZI00013	Bowl support axle IF/IR 17/22/33/42/53
11	A86ME24115	Screw M8x35 TF÷TR	A86ME24115	Screw M8x35 TF÷TR
13	S63FS67001	Safety guard pin TF/TR 33/42/53	S63FS67001	Safety guard pin TF/TR 33/42/53
14	A96ZE00012	Cam for safety guard IF	A96ZE00012	Cam for safety guard IF
15	A86ME32013	Screw M8x10 TF÷TR	A86ME32013	Screw M8x10 TF÷TR
16	A86ME24116	Screw M8x25 TF÷TR	A86ME24116	Screw M8x25 TF÷TR
17	A86ME26024	S.steel washer grover Ø 8,5 TF÷TR	A86ME26024	S.steel washer grover Ø 8,5 TF÷TR
18	A86ME26025	S.Steel washer Ø8 TF÷TR	A86ME26025	S.Steel washer Ø8 TF÷TR
19	A96ZH00007	Pinion gear z=15 08B IF/IR 33/42/53	A96ZH00007	Pinion gear z=15 08B IF/IR 33/42/53
20	A96ZS00007	Spiral support IF/IR 33/42/53	A96ZS00007	Spiral support IF/IR 33/42/53
21	A86ME24114	Screw M8x30	A86ME24114	Screw M8x30
22	A89CK00011	Bearing 6006-2RS IF÷IR 33÷42÷53	A89CK00011	Bearing 6006-2RS IF÷IR 33÷42÷53
23	A86ME36009	Key 6x6x35 TF÷TR 33÷42÷53	A86ME36009	Key 6x6x35 TF÷TR 33÷42÷53
24	A96ZI00016	Axle for spiral base IF/IR 33/42/53	A96ZI00016	Axle for spiral base IF/IR 33/42/53
25	A96ZS00005	Spiral IF/IR 33/42/53	A96ZS00005	Spiral IF/IR 33/42/53
27	A96ZN00025	Wire clip IF/IR	A96ZN00025	Wire clip IF/IR
28	A96ZN00026	Supply wire IF/IR 17/22/33/42/53	A96ZN00026	Supply wire IF/IR 17/22/33/42/53
33	A96ZA00002	Rod breaking dough IF/IR 33	A96ZA00003	Rod breaking dough IF/IR 42
34	A86ME24117	Screw M10x25 TF÷TR	A86ME24117	Screw M10x25 TF÷TR
39	A96ZB00007	PROTEZIONE LATERALE IF 33	A96ZB00005	PROTEZIONE LATERALE IF 42
41	A96ZF00011	Steel Foot M12 IF/IR	A96ZF00011	Steel Foot M12 IF/IR
42	A96ZF00019	Insert for plastic foot IF/IR	A96ZF00019	Insert for plastic foot IF/IR
44	A96ZJ00024	Motor 400 V -1,5 kW - 50 Hz 90 B14 IF/IR 33/42/53 + IF/IR 33/42/53VS	A96ZJ00024	Motor 400 V -1,5 kW - 50 Hz 90 B14 IF/IR 33/42/53 + IF/IR 33/42/53VS
45	A96ZC00003	Cover IF/IR 33/42/53	A96ZC00003	Cover IF/IR 33/42/53
47	A96ZD00002	Ring in nylon IF/IR	A96ZD00002	Ring in nylon IF/IR
48	A86ME24033	Screw TCEI M4X30 ZN	A86ME24033	Screw TCEI M4X30 ZN
53	A96ZO00009	Control box IFE/IRE	A96ZO00009	Control box IFE/IRE
55	A96ZN00064	Contactor CN-6/4A 24 V IF/IR - SA300	A96ZN00064	Contactor CN-6/4A 24 V IF/IR - SA300
58	A96ZL00011	Ring fixing reduction gear IF/IR 33/42/53	A96ZL00011	Ring fixing reduction gear IF/IR 33/42/53
60	A86ME32015	Screw M8x10 TF÷TR	A86ME32015	Screw M8x10 TF÷TR
61	A96ZL00015	Gear box CM63 90 B14 1/30 FLS IF/IR 33/42/53	A96ZL00015	Gear box CM63 90 B14 1/30 FLS IF/IR 33/42/53
63	A96ZC00027	REAR PANEL TF 33÷42÷53 (WHITE)	A96ZC00027	REAR PANEL TF 33÷42÷53 (WHITE)
64	A96ZN00040	Transformer 230V/24V single-phase IFM/IRM	A96ZN00040	Transformer 230V/24V single-phase IFM/IRM

66	A96ZC00025	Black switch panel with Italian flag IFE/IRE	A96ZC00025	Black switch panel with Italian flag IFE/IRE
67	A96ZN00089	Complete black/white switch	A96ZN00089	Complete black/white switch
69	S14MT67002	Chain 06B/73 TF÷TR 33	S14MT67003	Spiral chain 08B/69 TF÷TR 42
70	A96ZH00011	Chain pinion gear z=29 08B IF/IR 33/42/53	A96ZH00011	Chain pinion gear z=29 08B IF/IR 33/42/53
71	A96ZI00025	Transmission shaft base UCF 205 IF 33/42/53 - IR 33/42/53	A96ZI00025	Transmission shaft base UCF 205 IF 33/42/53 - IR 33/42/53
72	A86ME26027	S.steel washer Ø 10 TF÷TR	A86ME26027	S.steel washer Ø 10 TF÷TR
73	A86ME26026	S.steel washer spring Ø 10 TF÷TR	A86ME26026	S.steel washer spring Ø 10 TF÷TR
74	A86ME24120	Screw M10x35 TF÷TR	A86ME24120	Screw M10x35 TF÷TR
76	A86ME36006	Key 6X6X30	A86ME36006	Key 6X6X30
81	A96ZH00009	Chain pinion gear z=16 06B IF/IR 33/42/53 + VS	A96ZH00009	Chain pinion gear z=16 06B IF/IR 33/42/53 + VS
83	S63TR67002	Transmissione shaft IF33	A96ZI00031	Transmission shaft IF 42/53
84	A86ME36004	Key 8X7X50	A86ME36004	Key 8X7X50
86	A96ZN00030	Micro-switch IF	A96ZN00030	Micro-switch IF
93	A96ZS00009	SPIRAL PLATE TF÷TR 33÷42÷53	A96ZS00009	SPIRAL PLATE TF÷TR 33÷42÷53
94	A96ZD00003	O-ring diam. 20x2,5 IR	A96ZD00003	O-ring diam. 20x2,5 IR
97	A96ZN00053	Nylon block base IF/IR	A96ZN00053	Nylon block base IF/IR
98	A86ME25018	Nut M5 ZN	A86ME25018	Nut M5 ZN
99	A96ZN00052	Tensioner base IF/IR	A96ZN00052	Tensioner base IF/IR
100	A86ME24122	Screw TCEI M5x30 TF÷TR	A86ME24122	Screw TCEI M5x30 TF÷TR
101	A96ZN00054	Nylon block	A96ZN00054	Nylon block
105	A96ZV00028	Bowl chain tensioner part IF/IR 33/42/53	A96ZV00028	Bowl chain tensioner part IF/IR 33/42/53
106	A96ZN00055	Control card 230/ 400 V IF/IR/IFM/IRM 17/22/33/42/53	A96ZN00055	Control card 230/ 400 V IF/IR/IFM/IRM 17/22/33/42/53

Pos.	**IFME 33**	**DESCRIPTION**
44	A96ZJ00039	Motor 230 V - 1,3 kW - 50 Hz 80 B14 IFM/IRM 33
61	A96ZL00008	Gear box CM050 80 B14 1/30 FLS IF/R 17/22

Pos.	IFE 53	DESCRIPTION
1	A96ZE00011	Safety guard IF/IR 53
2	A96ZV00019	Bowl IF/IR 53
5	A96ZD00001	Snap ring diam. 25 IF/IR
6	A89CK00010	Bearing 6205-2RS TF÷TR
7	A96ZV00025	Support bowl base IF/IR 17/22/33/42/53
8	S14MT67008	Bowl spiral 06B/144 TF÷TR 33÷42÷53
9	A96ZR00005	Crown z=85 06B IF/IR 33/42/53
10	A96ZI00013	Bowl support axle IF/IR 17/22/33/42/53
11	A86ME24115	Screw M8x35 TF÷TR
13	S63FS67001	Safety guard pin TF/TR 33/42/53
14	A96ZE00012	Cam for safety guard IF
15	A86ME32013	Screw M8x10 TF÷TR
16	A86ME24116	Screw M8x25 TF÷TR
17	A86ME26024	S.steel washer grover Ø 8,5 TF÷TR
18	A86ME26025	S.Steel washer Ø8 TF÷TR
19	A96ZH00007	Pinion gear z=15 08B IF/IR 33/42/53
20	A96ZS00007	Spiral support IF/IR 33/42/53
21	A86ME24114	Screw M8x30
22	A89CK00011	Bearing 6006-2RS IF÷IR 33÷42÷53
23	A86ME36009	Key 6x6x35 TF÷TR 33÷42÷53
24	A96ZI00016	Axle for spiral base IF/IR 33/42/53
25	A96ZS00005	Spiral IF/IR 33/42/53
27	A96ZN00025	Wire clip IF/IR
28	A96ZN00026	Supply wire IF/IR 17/22/33/42/53
33	A96ZA00004	Rod breaking dough IF/IR 53
34	A86ME24117	Screw M10x25 TF÷TR
39	A96ZB00013	Side safety panel IF 53
41	A96ZF00011	Steel Foot M12 IF/IR
42	A96ZF00019	Insert for plastic foot IF/IR
44	A96ZJ00024	Motor 400 V -1,5 kW - 50 Hz 90 B14 IF/IR 33/42/53 + IF/IR 33/42/53VS
45	A96ZC00003	Cover IF/IR 33/42/53
47	A96ZD00002	Ring in nylon IF/IR
48	A86ME24033	Screw TCEI M4X30 ZN
53	A96ZO00009	Control box IFE/IRE
55	A96ZN00064	Contactor CN-6/4A 24 V IF/IR - SA300
58	A96ZL00011	Ring fixing reduction gear IF/IR 33/42/53
60	A86ME32015	Screw M8x10 TF÷TR
61	A96ZL00015	Gear box CM63 90 B14 1/30 FLS IF/IR 33/42/53
63	A96ZC00027	REAR PANEL TF 33÷42÷53 (WHITE)
64	A96ZN00040	Transformer 230V/24V single-phase IFM/IRM
66	A96ZC00025	Black switch panel with Italian flag IFE/IRE
67	A96ZN00089	Complete black/white switch
69	S14MT67009	SPIRAL CHAIN 08B/66 TF÷TR 53
70	A96ZH00011	Chain pinion gear z=29 08B IF/IR 33/42/53
71	A96ZI00025	Transmission shaft base UCF 205 IF 33/42/53 - IR 33/42/53
72	A86ME26027	S.steel washer Ø 10 TF÷TR
73	A86ME26026	S.steel washer spring Ø 10 TF÷TR
74	A86ME24120	Screw M10x35 TF÷TR
76	A86ME36006	Key 6X6X30
81	A96ZH00009	Chain pinion gear z=16 06B IF/IR 33/42/53 + VS
83	A96ZI00031	Transmission shaft IF 42/53
84	A86ME36004	Key 8X7X50
86	A96ZN00030	Micro-switch IF

93	A96ZS00009	SPIRAL PLATE TF÷TR 33÷42÷53
94	A96ZD00003	O-ring diam. 20x2,5 IR
97	A96ZN00053	Nylon block base IF/IR
98	A86ME25018	Nut M5 ZN
99	A96ZN00052	Tensioner base IF/IR
100	A86ME24122	Screw TCEI M5x30 TF÷TR
101	A96ZN00054	Nylon block
105	A96ZV00028	Bowl chain tensioner part IF/IR 33/42/53
106	A96ZN00055	Control card 230/ 400 V IF/IR/IFM/IRM 17/22/33/42/53

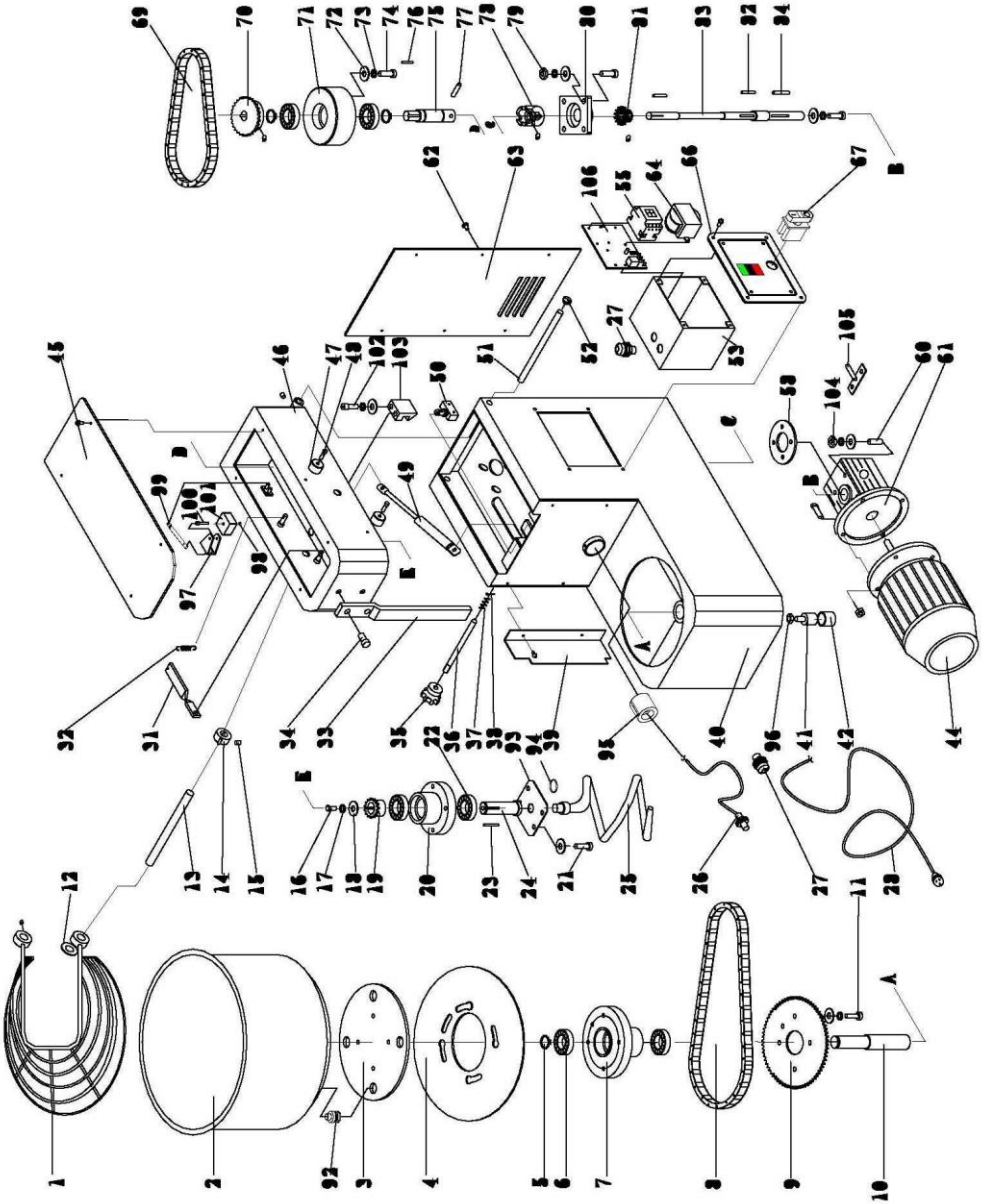

IRE17-IRE22-IRE33-IRE42-IRE53-IREM17-IREM22

POS.	IRE 17	DESCRIPTION	IRE 22	DESCRIPTION
1	A96ZE00007	Safety guard IF/IR 17	A96ZE00008	Safety guard IF/IR 22
2	A96ZV00015	Bowl IF/IR 17	A96ZV00016	Bowl IF/IR 22
3	A96ZV00020	Bowl flange IR	A96ZV00020	Bowl flange IR
4	A96ZV00021	Bowl blocking plate IR 17	A96ZV00026	Plate lock bowl IR 22
5	A96ZD00001	Snap ring diam. 25 IF/IR	A96ZD00001	Snap ring diam. 25 IF/IR
6	A89CK00010	Bearing 6205-2RS TF÷TR	A89CK00010	Bearing 6205-2RS TF÷TR
7	A96ZV00025	Support bowl base IF/IR 17/22/33/42/53	A96ZV00025	Support bowl base IF/IR 17/22/33/42/53
8	S14MT67007	Bowl chain 06B/126 IF÷IR 17÷22	S14MT67007	Bowl chain 06B/126 IF÷IR 17÷22
9	A96ZR00004	Crown z=72 06B IF/IR 17/22	A96ZR00004	Crown z=72 06B IF/IR 17/22
10	A96ZI00013	Bowl support axle IF/IR 17/22/33/42/53	A96ZI00013	Bowl support axle IF/IR 17/22/33/42/53
11	A86ME24115	Screw M8x35 TF÷TR	A86ME24115	Screw M8x35 TF÷TR
12	A96ZE00013	Guard ring IR	A96ZE00013	Guard ring IR
13	A96ZI00014	Safety guard pin IF/IR 17/22	A96ZI00014	Safety guard pin IF/IR 17/22
14	A96ZE00014	Cam for safety guard IR	A96ZE00014	Cam for safety guard IR
15	A86ME32013	Screw M8x10 TF÷TR	A86ME32013	Screw M8x10 TF÷TR
16	A86ME24116	Screw M8x25 TF÷TR	A86ME24116	Screw M8x25 TF÷TR
17	A86ME26024	S.steel washer grover Ø 8,5 TF÷TR	A86ME26024	S.steel washer grover Ø 8,5 TF÷TR
18	A86ME26025	S.Steel washer Ø8 TF÷TR	A86ME26025	S.Steel washer Ø8 TF÷TR
19	A96ZH00006	Pinion gear z=15 06B IF/IR 17/22	A96ZH00006	Pinion gear z=15 06B IF/IR 17/22
20	A96ZS00006	Spiral support IF/IF 17/22	A96ZS00006	Spiral support IF/IF 17/22
21	A86ME24114	Screw M8x30	A86ME24114	Screw M8x30
22	A89CK00010	Bearing 6205-2RS TF÷TR	A89CK00010	Bearing 6205-2RS TF÷TR
23	A86ME36008	Key 6x6x20 TF÷TR 17÷22	A86ME36008	Key 6x6x20 TF÷TR 17÷22
24	A96ZI00015	Axle for spiral base IF/IR 17/22	A96ZI00015	Axle for spiral base IF/IR 17/22
25	A96ZS00004	Spiral IF/IR 17/22	A96ZS00004	Spiral IF/IR 17/22
26	A96ZN00024	Distance sensor with two cables "NO" IR/IR 2V	A96ZN00024	Distance sensor with two cables "NO" IR/IR 2V
27	A96ZN00025	Wire clip IF/IR	A96ZN00025	Wire clip IF/IR
28	A96ZN00026	Supply wire IF/IR 17/22/33/42/53	A96ZN00026	Supply wire IF/IR 17/22/33/42/53
31	A96ZF00003	Pivot for fixing spring IR	A96ZF00003	Pivot for fixing spring IR
32	A86ME30008	Spring diam. 1,2 x diam. 8,5 x 20/13 IR	A86ME30008	Spring diam. 1,2 x diam. 8,5 x 20/13 IR
33	A96ZA00001	Dough breaking rod IF/IR 17	A96ZA00005	Rod breaking dough IF/IR 22
34	A86ME24117	Screw M10x25 TF÷TR	A86ME24117	Screw M10x25 TF÷TR
35	A96ZF00008	Head closing knob IR	A96ZF00008	Head closing knob IR
36	A96ZI00028	Head closing shaft IR 17/22	A96ZI00028	Head closing shaft IR 17/22
37	A96ZN00036	Spring Ø 1,5 x Ø 14 x 30/6 IR	A96ZN00036	Spring Ø 1,5 x Ø 14 x 30/6 IR
38	A96ZF00009	Pin diam. 3,2 IR	A96ZF00009	Pin diam. 3,2 IR
39	A96ZB00001	Side safety panel IR 17	A96ZB00008	Side safety panel IR 22
41	A96ZF00011	Steel Foot M12 IF/IR	A96ZF00011	Steel Foot M12 IF/IR
42	A96ZF00019	Insert for plastic foot IF/IR	A96ZF00019	Insert for plastic foot IF/IR
44	A87MR56010	Motor 400 V - 0,75 kW - 50 Hz 80 B14 IF/IR17/22 + IF/IR17/22 VS PF30-33	A87MR56010	Motor 400 V - 0,75 kW - 50 Hz 80 B14 IF/IR17/22 + IF/IR17/22 VS PF30-33
45	A96ZC00001	Cover IF/IR 17/22 (white)	A96ZC00001	Cover IF/IR 17/22 (white)
47	A96ZD00002	Ring in nylon IF/IR	A96ZD00002	Ring in nylon IF/IR
48	A86ME24033	Screw TCEI M4X30 ZN	A86ME24033	Screw TCEI M4X30 ZN
49	A96ZF00018	Gas spring IR	A96ZF00018	Gas spring IR
50	A96ZN00042	Micro-switch IR	A96ZN00042	Micro-switch IR
51	A96ZI00026	Head rotation shaft IR 17/22	A96ZI00026	Head rotation shaft IR 17/22
52	A96ZF00007	Axis cover IR	A96ZF00007	Axis cover IR

53	A96ZO00009	Control box IFE/IRE	A96ZO00009	Control box IFE/IRE
55	A96ZN00064	Contactor CN-6/4A 24 V IF/IR - SA300	A96ZN00064	Contactor CN-6/4A 24 V IF/IR - SA300
58	A96ZL00010	Reduction gear fixing ring IF/IR 17/22	A96ZL00010	Reduction gear fixing ring IF/IR 17/22
60	A86ME32015	Screw M8x10 TF÷TR	A86ME32015	Screw M8x10 TF÷TR
61	A96ZL00008	Gear box CM050 80 B14 1/30 FLS IF/R 17/22	A96ZL00008	Gear box CM050 80 B14 1/30 FLS IF/R 17/22
62	A86ME24118	Screw M5x10 TF÷TR	A86ME24118	Screw M5x10 TF÷TR
63	A96ZC00026	REAR PANEL TF 17÷22 (WHITE)	A96ZC00026	REAR PANEL TF 17÷22 (WHITE)
64	A96ZN00040	Transformer 230V/24V single-phase IFM/IRM	A96ZN00040	Transformer 230V/24V single-phase IFM/IRM
66	A96ZC00025	Black switch panel with Italian flag IFE/IRE	A96ZC00025	Black switch panel with Italian flag IFE/IRE
67	A96ZN00089	Complete black/white switch	A96ZN00089	Complete black/white switch
69	S14MT67001	Chain for Spiral 06B/86 TF÷TR 17	S14MT67001	Chain for Spiral 06B/86 TF÷TR 17
70	A96ZH00010	Chain pinion gear z=29 06B IF/IR 17/22	A96ZH00010	Chain pinion gear z=29 06B IF/IR 17/22
71	A96ZI00024	Transmission shaft base UCF 204 IF 17/22 - IR 17/22	A96ZI00024	Transmission shaft base UCF 204 IF 17/22 - IR 17/22
72	A86ME26027	S.steel washer Ø 10 TF÷TR	A86ME26027	S.steel washer Ø 10 TF÷TR
73	A86ME26026	S.steel washer spring Ø 10 TF÷TR	A86ME26026	S.steel washer spring Ø 10 TF÷TR
74	A86ME24120	Screw M10x35 TF÷TR	A86ME24120	Screw M10x35 TF÷TR
75	A96ZI00020	Connecting shaft IR 17/22	A96ZI00020	Connecting shaft IR 17/22
76	A86ME36006	Key 6X6X30	A86ME36006	Key 6X6X30
77	A96ZN00027	Connecting pin Ø 10x50 IR	A96ZN00027	Connecting pin Ø 10x50 IR
78	A96ZT00001	Transmission coupling IR 17/22	A96ZT00001	Transmission coupling IR 17/22
79	A86ME25024	Nut M10 ZN	A86ME25024	Nut M10 ZN
80	A96ZI00024	Transmission shaft base UCF 204 IF 17/22 - IR 17/22	A96ZI00024	Transmission shaft base UCF 204 IF 17/22 - IR 17/22
81	A96ZH00008	Chain pinion gear z=14 06B TF/TR 17/22	A96ZH00008	Chain pinion gear z=14 06B TF/TR 17/22
82	A86ME36006	Key 6X6X30	A86ME36006	Key 6X6X30
83	A96ZI00030	Transmission shaft TF 17-22 "2008"	A96ZI00030	Transmission shaft TF 17-22 "2008"
84	A86ME36004	Key 8X7X50	A86ME36004	Key 8X7X50
92	S69IV67001	Bowls peg TR	S69IV67001	Bowls peg TR
93	S42PL00002	SPIRAL PLATE TF÷TR 17÷22	S42PL00002	SPIRAL PLATE TF÷TR 17÷22
94	A96ZD00003	O-ring diam. 20x2,5 IR	A96ZD00003	O-ring diam. 20x2,5 IR
95	A96ZN00057	Proximity micro L=45 mm TR 17÷22	A96ZN00057	Proximity micro L=45 mm TR 17÷22
96	A86ME25026	Nut M12 ZN	A86ME25026	Nut M12 ZN
97	A96ZN00053	Nylon block base IF/IR	A96ZN00053	Nylon block base IF/IR
98	A86ME25018	Nut M5 ZN	A86ME25018	Nut M5 ZN
99	A96ZN00052	Tensioner base IF/IR	A96ZN00052	Tensioner base IF/IR
100	A86ME24122	Screw TCEI M5x30 TF÷TR	A86ME24122	Screw TCEI M5x30 TF÷TR
101	A96ZN00054	Nylon block	A96ZN00054	Nylon block
102	A86ME24124	Screw TCEI M10x25 TR	A86ME24124	Screw TCEI M10x25 TR
103	A96ZF00012	Head closing hook	A96ZF00012	Head closing hook
104	A86ME25019	Nut M8 ZN	A86ME25019	Nut M8 ZN
105	A96ZV00027	Bowl chain tensioner part IF/IR 17/22	A96ZV00027	Bowl chain tensioner part IF/IR 17/22
106	A96ZN00055	Control card 230/ 400 V IF/IR/IFM/IRM 17/22/33/42/53	A96ZN00055	Control card 230/ 400 V IF/IR/IFM/IRM 17/22/33/42/53
Pos.	**IRME 17**	**DESCRIPTION**	**IRME 22**	**DESCRIPTION**

44	A87MR56008	Motor 220V-0,75 kW-50 Hz TFM÷TRM 17÷22	A87MR56008	Motor 220V-0,75 kW-50 Hz TFM÷TRM 17÷22
61	A96ZL00008	Gear box CM050 80 B14 1/30 FLS IF/R 17/22	A96ZL00008	Gear box CM050 80 B14 1/30 FLS IF/R 17/22

POS.	IRE 33	DESCRIPTION	IRE 42	DESCRIPTION
1	A96ZE00009	Safety guard IF/IR 33	A96ZE00010	Safety guard IF/IR 42
2	A96ZV00017	Bowl IF/IR 33	A96ZV00018	Bowl IF/IR 42
3	A96ZV00020	Bowl flange IR	A96ZV00020	Bowl flange IR
4	A96ZV00022	Plate block bowl IR 33	A96ZV00023	Plate block bowl IR 42
5	A96ZD00001	Snap ring diam. 25 IF/IR	A96ZD00001	Snap ring diam. 25 IF/IR
6	A89CK00010	Bearing 6205-2RS TF÷TR	A89CK00010	Bearing 6205-2RS TF÷TR
7	A96ZV00025	Support bowl base IF/IR 17/22/33/42/53	A96ZV00025	Support bowl base IF/IR 17/22/33/42/53
8	S14MT67008	Bowl spiral 06B/144 TF÷TR 33÷42÷53	S14MT67008	Bowl spiral 06B/144 TF÷TR 33÷42÷53
9	A96ZR00005	Crown z=85 06B IF/IR 33/42/53	A96ZR00005	Crown z=85 06B IF/IR 33/42/53
10	A96ZI00013	Bowl support axle IF/IR 17/22/33/42/53	A96ZI00013	Bowl support axle IF/IR 17/22/33/42/53
11	A86ME24115	Screw M8x35 TF÷TR	A86ME24115	Screw M8x35 TF÷TR
12	A96ZE00013	Guard ring IR	A96ZE00013	Guard ring IR
13	S63FS67001	Safety guard pin TF/TR 33/42/53	S63FS67001	Safety guard pin TF/TR 33/42/53
14	A96ZE00014	Cam for safety guard IR	A96ZE00014	Cam for safety guard IR
15	A86ME32013	Screw M8x10 TF÷TR	A86ME32013	Screw M8x10 TF÷TR
16	A86ME24116	Screw M8x25 TF÷TR	A86ME24116	Screw M8x25 TF÷TR
17	A86ME26024	S.steel washer grover Ø 8,5 TF÷TR	A86ME26024	S.steel washer grover Ø 8,5 TF÷TR
18	A86ME26025	S.Steel washer Ø8 TF÷TR	A86ME26025	S.Steel washer Ø8 TF÷TR
19	A96ZH00007	Pinion gear z=15 08B IF/IR 33/42/53	A96ZH00007	Pinion gear z=15 08B IF/IR 33/42/53
20	A96ZS00007	Spiral support IF/IR 33/42/53	A96ZS00007	Spiral support IF/IR 33/42/53
21	A86ME24114	Screw M8x30	A86ME24114	Screw M8x30
22	A89CK00011	Bearing 6006-2RS IF÷IR 33÷42÷53	A89CK00011	Bearing 6006-2RS IF÷IR 33÷42÷53
23	A86ME36009	Key 6x6x35 TF÷TR 33÷42÷53	A86ME36009	Key 6x6x35 TF÷TR 33÷42÷53
24	A96ZI00016	Axle for spiral base IF/IR 33/42/53	A96ZI00016	Axle for spiral base IF/IR 33/42/53
25	A96ZS00005	Spiral IF/IR 33/42/53	A96ZS00005	Spiral IF/IR 33/42/53
26	A96ZN00024	Distance sensor with two cables "NO" IR/IR 2V	A96ZN00024	Distance sensor with two cables "NO" IR/IR 2V
27	A96ZN00025	Wire clip IF/IR	A96ZN00025	Wire clip IF/IR
28	A96ZN00026	Supply wire IF/IR 17/22/33/42/53	A96ZN00026	Supply wire IF/IR 17/22/33/42/53
31	A96ZF00004	Pivot for fixing spring IR 33/42/53	A96ZF00004	Pivot for fixing spring IR 33/42/53
32	A86ME30008	Spring diam. 1,2 x diam. 8,5 x 20/13 IR	A86ME30008	Spring diam. 1,2 x diam. 8,5 x 20/13 IR
33	A96ZA00002	Rod breaking dough IF/IR 33	A96ZA00003	Rod breaking dough IF/IR 42
34	A86ME24117	Screw M10x25 TF÷TR	A86ME24117	Screw M10x25 TF÷TR
35	A96ZF00008	Head closing knob IR	A96ZF00008	Head closing knob IR
36	A96ZI00029	Closing handle axle IR 33/42/53	A96ZI00029	Closing handle axle IR 33/42/53
37	A96ZN00036	Spring Ø 1,5 x Ø 14 x 30/6 IR	A96ZN00036	Spring Ø 1,5 x Ø 14 x 30/6 IR
38	A96ZF00009	Pin diam. 3,2 IR	A96ZF00009	Pin diam. 3,2 IR
39	A96ZB00002	Side safety panel IR 33	A96ZB00003	Side safety panel IR 42
41	A96ZF00011	Steel Foot M12 IF/IR	A96ZF00011	Steel Foot M12 IF/IR
42	A96ZF00019	Insert for plastic foot IF/IR	A96ZF00019	Insert for plastic foot IF/IR
44	A96ZJ00024	Motor 400 V -1,5 kW - 50 Hz 90 B14 IF/IR 33/42/53 + IF/IR 33/42/53VS	A96ZJ00024	Motor 400 V -1,5 kW - 50 Hz 90 B14 IF/IR 33/42/53 + IF/IR 33/42/53VS
45	A96ZC00003	Cover IF/IR 33/42/53	A96ZC00003	Cover IF/IR 33/42/53
47	A96ZD00002	Ring in nylon IF/IR	A96ZD00002	Ring in nylon IF/IR
48	A86ME24033	Screw TCEI M4X30 ZN	A86ME24033	Screw TCEI M4X30 ZN

49	A96ZF00018	Gas spring IR	A96ZF00018	Gas spring IR
50	A96ZN00042	Micro-switch IR	A96ZN00042	Micro-switch IR
51	A96ZI00026	Head rotation shaft IR 17/22	A96ZI00026	Head rotation shaft IR 17/22
52	A96ZF00007	Axis cover IR	A96ZF00007	Axis cover IR
53	A96ZO00009	Control box IFE/IRE	A96ZO00009	Control box IFE/IRE
55	A96ZN00064	Contactor CN-6/4A 24 V IF/IR - SA300	A96ZN00064	Contactor CN-6/4A 24 V IF/IR - SA300
58	A96ZL00011	Ring fixing reduction gear IF/IR 33/42/53	A96ZL00011	Ring fixing reduction gear IF/IR 33/42/53
60	A86ME32015	Screw M8x10 TF÷TR	A86ME32015	Screw M8x10 TF÷TR
61	A96ZL00015	Gear box CM63 90 B14 1/30 FLS IF/IR 33/42/53	A96ZL00015	Gear box CM63 90 B14 1/30 FLS IF/IR 33/42/53
62	A86ME24118	Screw M5x10 TF÷TR	A86ME24118	Screw M5x10 TF÷TR
63	A96ZC00027	REAR PANEL TF 33÷42÷53 (WHITE)	A96ZC00027	REAR PANEL TF 33÷42÷53 (WHITE)
64	A96ZN00040	Transformer 230V/24V single-phase IFM/IRM	A96ZN00040	Transformer 230V/24V single-phase IFM/IRM
66	A96ZC00025	Black switch panel with Italian flag IFE/IRE	A96ZC00025	Black switch panel with Italian flag IFE/IRE
67	A96ZN00089	Complete black/white switch	A96ZN00089	Complete black/white switch
69	S14MT67002	Chain 06B/73 TF÷TR 33	S14MT67003	Spiral chain 08B/69 TF÷TR 42
70	A96ZH00011	Chain pinion gear z=29 08B IF/IR 33/42/53	A96ZH00011	Chain pinion gear z=29 08B IF/IR 33/42/53
71	A96ZI00025	Transmission shaft base UCF 205 IF 33/42/53 - IR 33/42/53	A96ZI00025	Transmission shaft base UCF 205 IF 33/42/53 - IR 33/42/53
72	A86ME26027	S.steel washer Ø 10 TF÷TR	A86ME26027	S.steel washer Ø 10 TF÷TR
73	A86ME26026	S.steel washer spring Ø 10 TF÷TR	A86ME26026	S.steel washer spring Ø 10 TF÷TR
74	A86ME24120	Screw M10x35 TF÷TR	A86ME24120	Screw M10x35 TF÷TR
75	A96ZI00021	Connecting shaft IR 33/42/53	A96ZI00021	Connecting shaft IR 33/42/53
76	A86ME36006	Key 6X6X30	A86ME36006	Key 6X6X30
77	A96ZN00027	Connecting pin Ø 10x50 IR	A96ZN00027	Connecting pin Ø 10x50 IR
78	A96ZT00002	Transmission joint IR 33/42/53	A96ZT00002	Transmission joint IR 33/42/53
79	A86ME25024	Nut M10 ZN	A86ME25024	Nut M10 ZN
80	A96ZI00025	Transmission shaft base UCF 205 IF 33/42/53 - IR 33/42/53	A96ZI00025	Transmission shaft base UCF 205 IF 33/42/53 - IR 33/42/53
81	A96ZH00009	Chain pinion gear z=16 06B IF/IR 33/42/53 + VS	A96ZH00009	Chain pinion gear z=16 06B IF/IR 33/42/53 + VS
82	A86ME36006	Key 6X6X30	A86ME36006	Key 6X6X30
83	S63TR67002	Transmissione shaft IF33	A96ZI00031	Transmission shaft IF 42/53
84	A86ME36004	Key 8X7X50	A86ME36004	Key 8X7X50
92	S69IV67001	Bowls peg TR	S69IV67001	Bowls peg TR
93	S42PL00002	SPIRAL PLATE TF÷TR 17÷22	S42PL00002	SPIRAL PLATE TF÷TR 17÷22
94	A96ZD00003	O-ring diam. 20x2,5 IR	A96ZD00003	O-ring diam. 20x2,5 IR
95	A96ZN00058	Proximity micro L=75 mm IR 17/22/33/42/53	A96ZN00058	Proximity micro L=75 mm IR 17/22/33/42/53
96	A86ME25026	Nut M12 ZN	A86ME25026	Nut M12 ZN
97	A96ZN00053	Nylon block base IF/IR	A96ZN00053	Nylon block base IF/IR
98	A86ME25018	Nut M5 ZN	A86ME25018	Nut M5 ZN
99	A96ZN00052	Tensioner base IF/IR	A96ZN00052	Tensioner base IF/IR
100	A86ME24122	Screw TCEI M5x30 TF÷TR	A86ME24122	Screw TCEI M5x30 TF÷TR
101	A96ZN00054	Nylon block	A96ZN00054	Nylon block
102	A86ME24124	Screw TCEI M10x25 TR	A86ME24124	Screw TCEI M10x25 TR
103	A96ZF00012	Head closing hook	A96ZF00012	Head closing hook
104	A86ME25019	Nut M8 ZN	A86ME25019	Nut M8 ZN
105	A96ZV00028	Bowl chain tensioner part IF/IR 33/42/53	A96ZV00028	Bowl chain tensioner part IF/IR 33/42/53
106	A96ZN00055	Control card 230/ 400 V IF/IR/IFM/IRM 17/22/33/42/53	A96ZN00055	Control card 230/ 400 V IF/IR/IFM/IRM 17/22/33/42/53

POS.	IRE 53	DESCRIPTION
1	A96ZE00011	Safety guard IF/IR 53
2	A96ZV00019	Bowl IF/IR 53
3	A96ZV00020	Bowl flange IR
4	A96ZV00024	Plate block bowl IR 53
5	A96ZD00001	Snap ring diam. 25 IF/IR
6	A89CK00010	Bearing 6205-2RS TF÷TR
7	A96ZV00025	Support bowl base IF/IR 17/22/33/42/53
8	S14MT67008	Bowl spiral 06B/144 TF÷TR 33÷42÷53
9	A96ZR00005	Crown z=85 06B IF/IR 33/42/53
10	A96ZI00013	Bowl support axle IF/IR 17/22/33/42/53
11	A86ME24115	Screw M8x35 TF÷TR
12	A96ZE00013	Guard ring IR
13	S63FS67001	Safety guard pin TF/TR 33/42/53
14	A96ZE00014	Cam for safety guard IR
15	A86ME32013	Screw M8x10 TF÷TR
16	A86ME24116	Screw M8x25 TF÷TR
17	A86ME26024	S.steel washer grover Ø 8,5 TF÷TR
18	A86ME26025	S.Steel washer Ø8 TF÷TR
19	A96ZH00007	Pinion gear z=15 08B IF/IR 33/42/53
20	A96ZS00007	Spiral support IF/IR 33/42/53
21	A86ME24114	Screw M8x30
22	A89CK00011	Bearing 6006-2RS IF÷IR 33÷42÷53
23	A86ME36009	Key 6x6x35 TF÷TR 33÷42÷53
24	A96ZI00016	Axle for spiral base IF/IR 33/42/53
25	A96ZS00005	Spiral IF/IR 33/42/53
26	A96ZN00024	Distance sensor with two cables "NO" IR/IR 2V
27	A96ZN00025	Wire clip IF/IR
28	A96ZN00026	Supply wire IF/IR 17/22/33/42/53
31	A96ZF00004	Pivot for fixing spring IR 33/42/53
32	A86ME30008	Spring diam. 1,2 x diam. 8,5 x 20/13 IR
33	A96ZA00004	Rod breaking dough IF/IR 53
34	A86ME24117	Screw M10x25 TF÷TR
35	A96ZF00008	Head closing knob IR
36	A96ZI00029	Closing handle axle IR 33/42/53
37	A96ZN00036	Spring Ø 1,5 x Ø 14 x 30/6 IR
38	A96ZF00009	Pin diam. 3,2 IR
39	A96ZB00004	Side safety panel IR 53
41	A96ZF00011	Steel Foot M12 IF/IR
42	A96ZF00019	Insert for plastic foot IF/IR
44	A96ZJ00024	Motor 400 V -1,5 kW - 50 Hz 90 B14 IF/IR 33/42/53 + IF/IR 33/42/53VS
45	A96ZC00003	Cover IF/IR 33/42/53
47	A96ZD00002	Ring in nylon IF/IR
48	A86ME24033	Screw TCEI M4X30 ZN
49	A96ZF00018	Gas spring IR
50	A96ZN00042	Micro-switch IR
51	A96ZI00026	Head rotation shaft IR 17/22
52	A96ZF00007	Axis cover IR
53	A96ZO00009	Control box IFE/IRE
55	A96ZN00064	Contactor CN-6/4A 24 V IF/IR - SA300
58	A96ZL00011	Ring fixing reduction gear IF/IR 33/42/53
60	A86ME32015	Screw M8x10 TF÷TR
61	A96ZL00015	Gear box CM63 90 B14 1/30 FLS IF/IR 33/42/53
62	A86ME24118	Screw M5x10 TF÷TR

63	A96ZC00027	REAR PANEL TF 33÷42÷53 (WHITE)
64	A96ZN00040	Transformer 230V/24V single-phase IFM/IRM
66	A96ZC00025	Black switch panel with Italian flag IFE/IRE
67	A96ZN00089	Complete black/white switch
69	S14MT67009	SPIRAL CHAIN 08B/66 TF÷TR 53
70	A96ZH00011	Chain pinion gear z=29 08B IF/IR 33/42/53
71	A96ZI00025	Transmission shaft base UCF 205 IF 33/42/53 - IR 33/42/53
72	A86ME26027	S.steel washer Ø 10 TF÷TR
73	A86ME26026	S.steel washer spring Ø 10 TF÷TR
74	A86ME24120	Screw M10x35 TF÷TR
75	A96ZI00021	Connecting shaft IR 33/42/53
76	A86ME36006	Key 6X6X30
77	A96ZN00027	Connecting pin Ø 10x50 IR
78	A96ZT00002	Transmission joint IR 33/42/53
79	A86ME25024	Nut M10 ZN
80	A96ZI00025	Transmission shaft base UCF 205 IF 33/42/53 - IR 33/42/53
81	A96ZH00009	Chain pinion gear z=16 06B IF/IR 33/42/53 + VS
82	A86ME36006	Key 6X6X30
83	A96ZI00031	Transmission shaft IF 42/53
84	A86ME36004	Key 8X7X50
92	S69IV67001	Bowls peg TR
93	S42PL00002	SPIRAL PLATE TF÷TR 17÷22
94	A96ZD00003	O-ring diam. 20x2,5 IR
95	A96ZN00058	Proximity micro L=75 mm IR 17/22/33/42/53
96	A86ME25026	Nut M12 ZN
97	A96ZN00053	Nylon block base IF/IR
98	A86ME25018	Nut M5 ZN
99	A96ZN00052	Tensioner base IF/IR
100	A86ME24122	Screw TCEI M5x30 TF÷TR
101	A96ZN00054	Nylon block
102	A86ME24124	Screw TCEI M10x25 TR
103	A96ZF00012	Head closing hook
104	A86ME25019	Nut M8 ZN
105	A96ZV00028	Bowl chain tensioner part IF/IR 33/42/53
106	A96ZN00055	Control card 230/ 400 V IF/IR/IFM/IRM 17/22/33/42/53

TECHNICAL DATA IF ÷ IR ÷ IFM ÷ IRM

Model	Power		Voltage	Machine dimensions	Weight	Dough weight	Bowl capacity	Mixing time	Bowl dimension ø x h	Spiral speed	Bowl speed
	kW	Hp	V	l x p x h	kg	kg	l	kg	cm	rpm	rpm
IFM7	0,30	0,40	230	25x50x51	41	6	7	24	24x16	75	10
IFM10	0,37	0,50	230	27x54x56	48	8	10	30	26x20	75	10
IFM15	0,45	0,50	230	32x59x57	50	10	15	40	30x21	75	10
IFM17	0,9	1,2	230	35x66x63	79	12	17	48	32x21	93	9
IFM22	0,9	1,2	230	40x69x63	82	18	22	70	35x21	93	9
IFM33	1,3	1,7	230	44x83x72	110	25	33	100	40x26	93	9
IF17	0,75	1	400	35x66x63	72	12	17	48	32x21	93	9
IF22	0,75	1	400	40x69x63	75	18	22	70	35x21	93	9
IF33	1,5	2	400	44x83x72	104	25	33	100	40x26	93	9
IF42	1,5	2	400	47x85x72	107	38	42	140	45x26	93	9
IF53	1,5	2	400	53x86x72	110	44	53	170	50x26	93	9
IRM10	0,37	0,50	230	27x59x57	50	8	10	30	26x20	75	10
IRM17	0,9	1,2	230	35x66x63	97	12	17	48	32x21	93	9
IRM22	0,9	1,2	230	40x69x63	100	18	22	70	35x21	93	9
IR17	0,75	1	400	35x66x63	90	12	17	48	32x21	93	9
IR22	0,75	1	400	40x69x63	93	18	22	70	35x21	93	9
IR33	1,5	2	400	44x83x72	126	25	33	100	40x26	93	9
IR42	1,5	2	400	47x85x72	130	38	42	140	45x26	93	9
IR53	1,5	2	400	53x86x72	134	44	53	170	50x26	93	9

TECHNICAL DATA IF-VS ÷ IR-VS

Model	Power		Voltage	Machine dimensions	Weight	Dough weight	Bowl capacity	Mixing time	Bowl dimension ø x h	Spiral speed	Bowl speed
	kW	Hp	V	l x p x h	kg	kg	l	kg	cm	rpm	rpm
IF17VS	0,75	1	230	35x66x63	73	12	17	48	32x21	100÷186	10÷19
IF22VS	0,75	1	230	40x69x63	76	18	22	70	35x21	100÷186	10÷19
IF33VS	1,5	2	230	44x83x72	106	25	33	100	40x26	94.5÷157	10÷17
IF42VS	1,5	2	230	47x85x72	113	38	42	140	45x26	94.5÷157	10÷17
IF53VS	1,5	2	230	53x86x72	112	44	53	170	50x26	94.5÷157	10÷17
IR17VS	0,75	1	230	37x68x64	91	12	17	48	32x21	100÷186	10÷19
IR22VS	0,75	1	230	47x72x64	94	22	22	70	35x21	100÷186	10÷19
IR33VS	1,5	2	230	46x84x73	127	33	33	100	40x26	94.5÷157	10÷17
IR42VS	1,5	2	230	49x86x73	131	42	42	140	45x26	94.5÷157	10÷17
IR53VS	1,5	2	230	55x87x73	136	53	53	170	50x26	94.5÷157	10÷17

TECHNICAL DATA IF-2V ÷ IR-2V

Model	Power		Voltage	Machine dimensions	Weight	Dough weight	Bowl capacity	Mixing time	Bowl dimension ø x h	Spiral speed	Bowl speed
	kW	Hp	V	l x p x h	kg	kg	l	kg	cm	rpm	rpm
IF22 2V	0,37 0,55	0,5 0,7	400	40x69x63	76	18	22	70	35x21	92÷139	9÷14
IF33 2V	0,8 1,1	1,1 1,5	400	44x83x72	106	25	33	100	40x26	92÷139	9÷14
IF42 2V	0,8 1,1	1,1 1,5	400	47x85x72	113	38	42	140	45x26	92÷139	9÷14
IF53 2V	0,8 1,1	1,1 1,5	400	53x86x72	112	44	53	170	50x26	92÷139	9÷14
IR22 2V	0,37 0,55	0,5 0,7	400	47x72x64	94	22	22	70	35x21	92÷139	9÷14
IR33 2V	0,8 1,1	1,1 1,5	400	46x84x73	127	33	33	100	40x26	92÷139	9÷14
IR42 2V	0,8 1,1	1,1 1,5	400	49x86x73	131	42	42	140	45x26	92÷139	9÷14
IR53 2V	0,8 1,1	1,1 1,5	400	55x87x73	136	53	53	170	50x26	92÷139	9÷14

TECHNICAL DATA IFE ÷ IRE

Model	Power		Voltage	Machine dimensions	Weight	Dough weight	Bowl capacity	Mixing time	Bowl dimension ø x h	Spiral speed	Bowl speed
	Kw	Hp	V	lxpxh	kg	kg	lt	kg	cm	rpm	rpm
IFME10	0,37	0,50	230	28x54x55	42	8	10	30	26x20	75	10
IFME15	0,37	0,50	230	32x60x58	50	10	15	40	30x21	75	10
IFE17	0,75	1,00	400	36x67x68	73,5	12	17	48	32x21	93	9
IFE22	0,75	1,00	400	40x69x68	76	18	22	70	35x21	93	9
IFE33	1,5	2,00	400	46x80x76	109	25	33	100	40x26	93	9
IFE42	1,5	2,00	400	49x83x76	113	38	42	140	45x26	93	9
IFE53	1,5	2,00	400	52x86x76	116	44	53	170	50x26	93	9
IFME17	0,75	1,00	230	36x67x68	73,5	12	17	48	32x21	93	9
IFME22	0,75	1,00	230	40x69x68	76	18	22	70	35x21	93	9
IFME33	1,30	1,70	230	46x80x76	109	25	33	100	40x26	93	9
IRE17	0,75	1,00	400	36x67x68	84	12	17	48	32x21	93	9
IRE22	0,75	1,00	400	40x69x68	89	18	22	70	35x21	93	9
IRE33	1,5	2,00	400	46x80x76	120	25	33	100	40x26	93	9
IRE42	1,5	2,00	400	49x83x76	127	38	42	140	45x26	93	9
IRE53	1,5	2,00	400	52x86x76	130	44	53	170	50x26	93	9
IRME17	0,75	1,00	230	36x67x68	84	12	17	48	32x21	93	9
IRME22	0,75	1,00	230	40x69x68	89	18	22	70	35x21	93	9